QB 48 039

B-17G Flying Fortress Engines 1/48 scale

MODELCHOICE.NET
ORDER & BUY DIRECTLY FROM MANUFACTURERS
plusmodel Calibre AIRES

4x

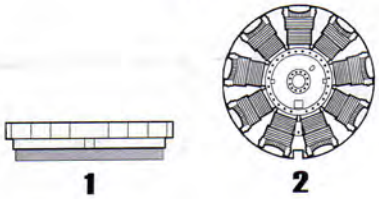

4x

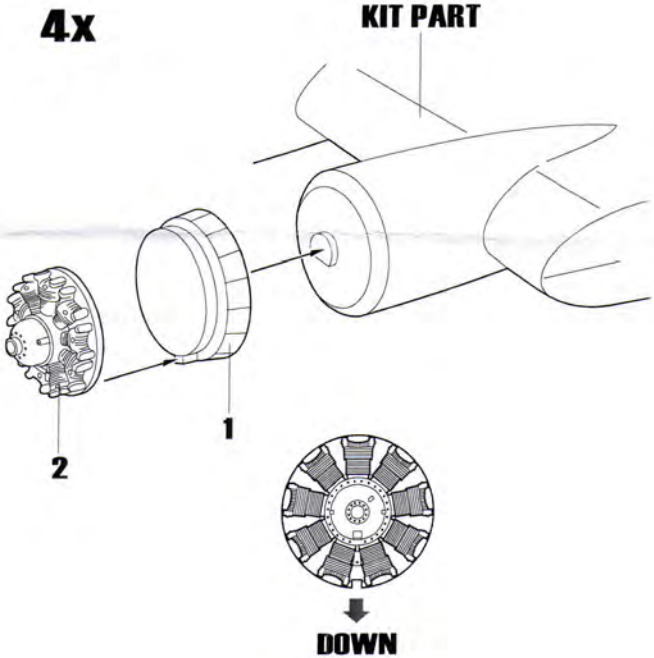

Recommended kit: REVELL/MONOGRAM