# Mobelwagen 3,7 cm Flak

35 277

*1/35 scale detail set for Tamiya kit*

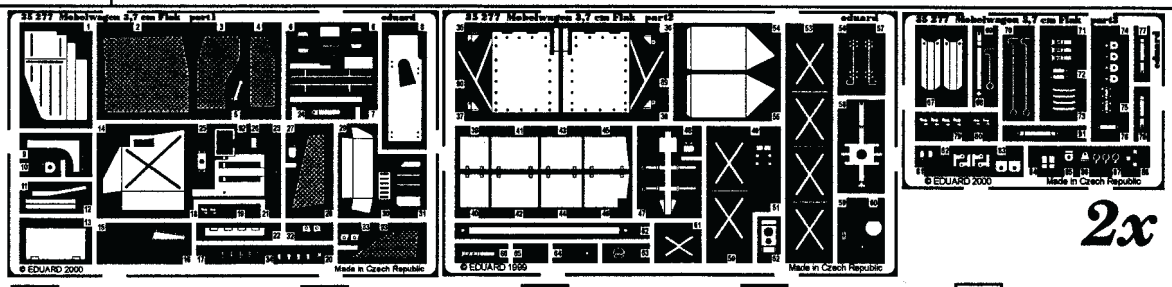


OPPOSITE SIDE | REMOVE | REPLACE | GRIND | BEND

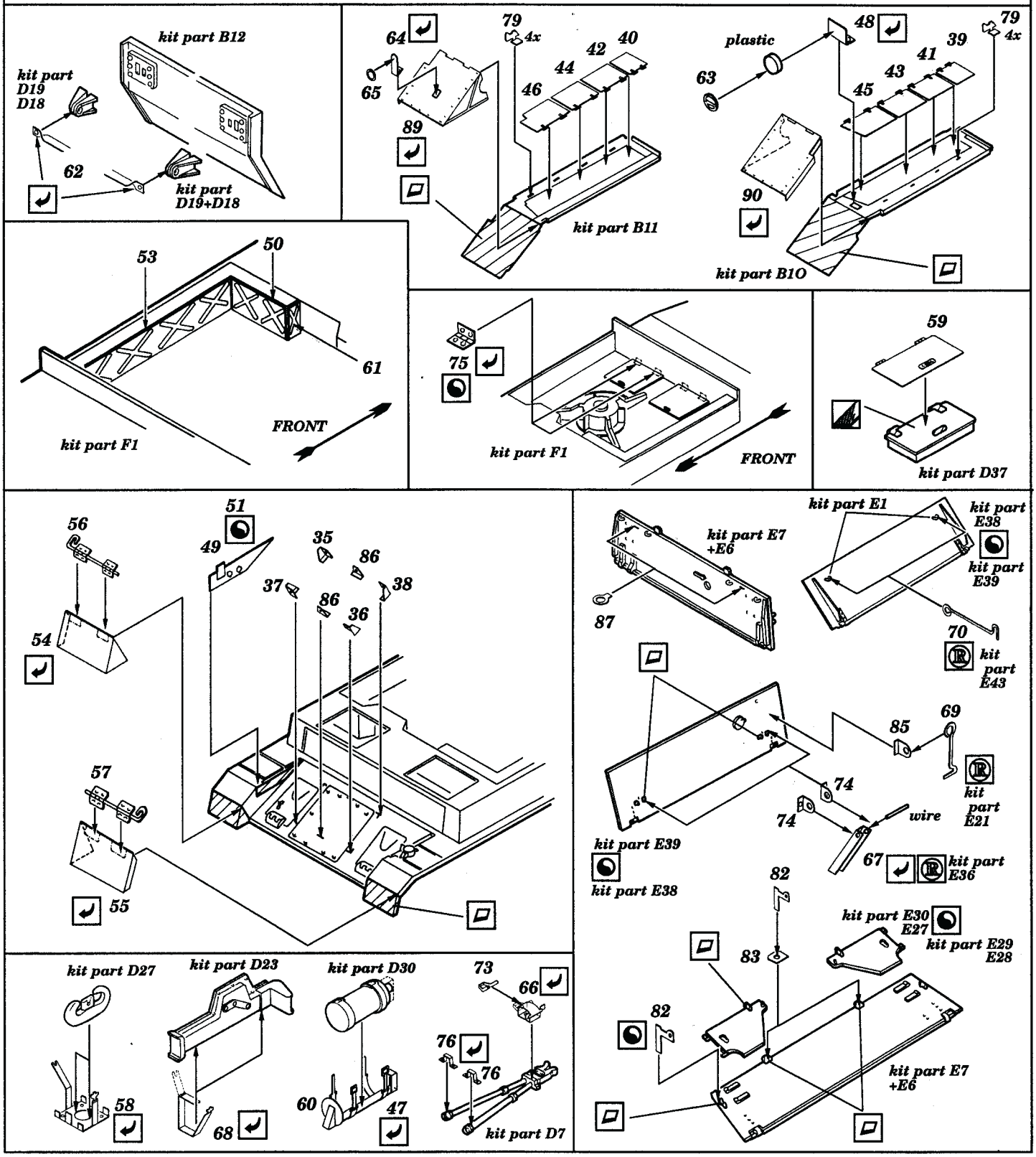

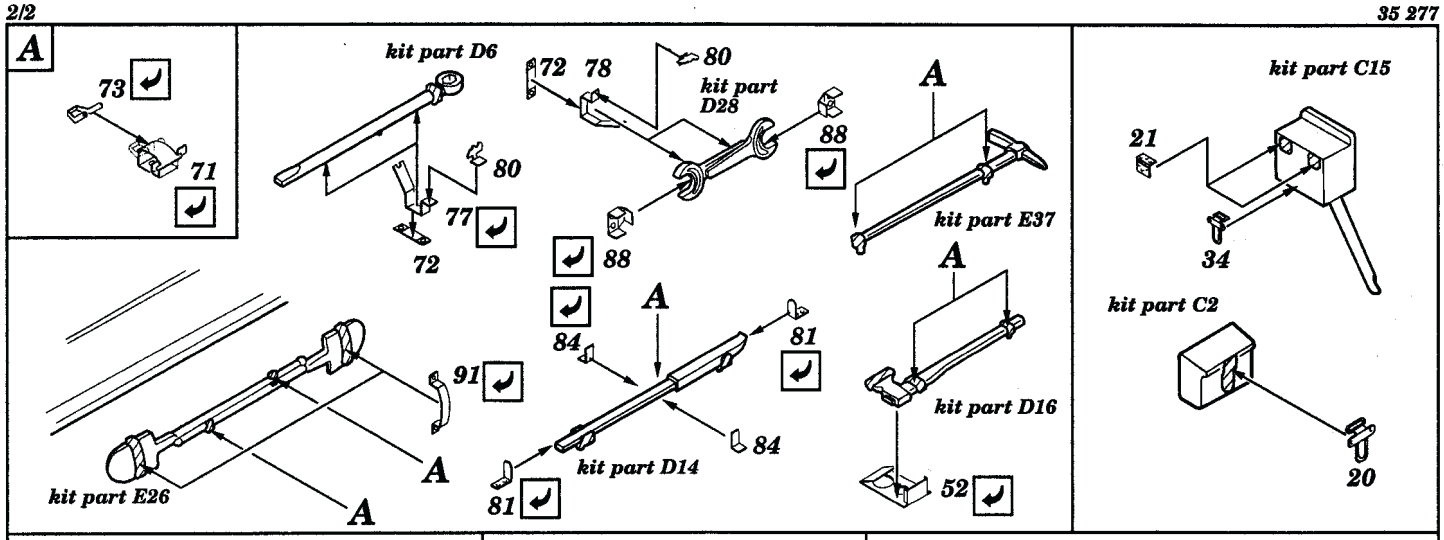
A
73
71
kit part D6
72
78
80
kit part D28
88
80
77
72
88
A
kit part E37
A
84
81
91
A
A
kit part E26
kit part D14
84
81
kit part D16
52
kit part C15
21
34
kit part C2
20

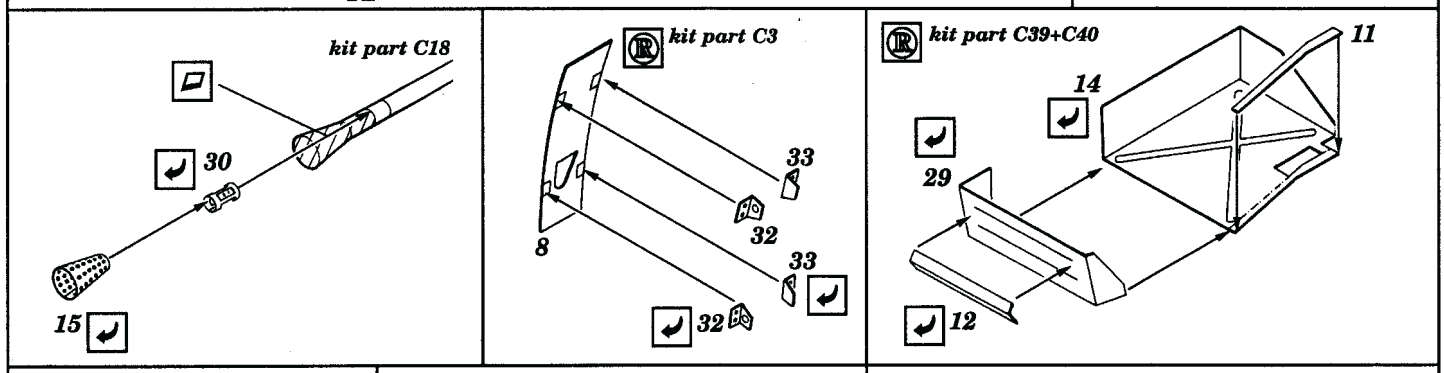
kit part C18
30
15
kit part C3
33
32
8
33
32
kit part C39+C40
11
14
29
12

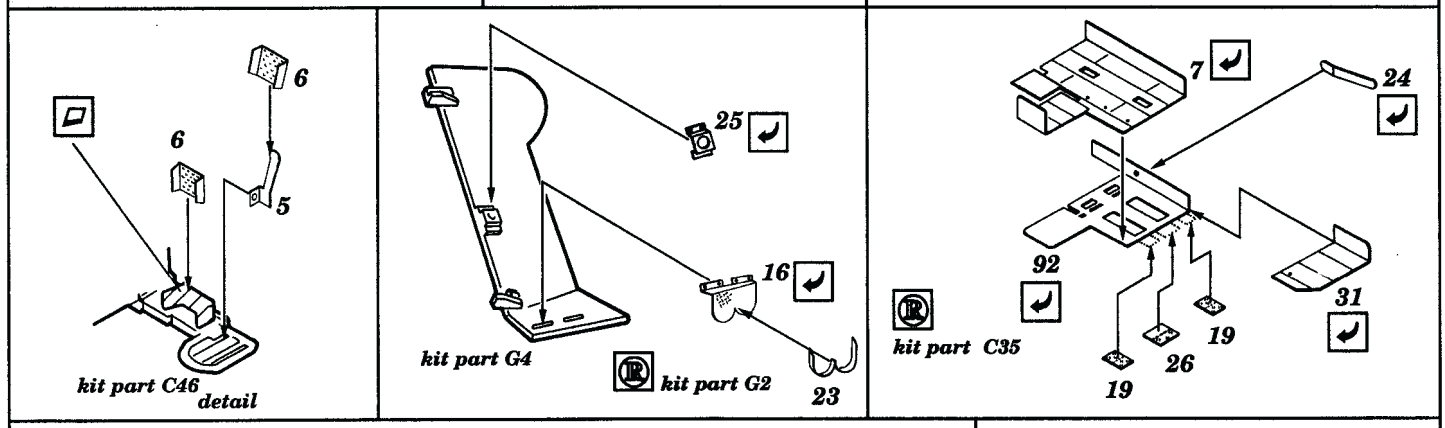
6
6
5
kit part C46
detail
25
16
kit part G4
kit part G2
23
7
24
92
31
kit part C35
19
26
19

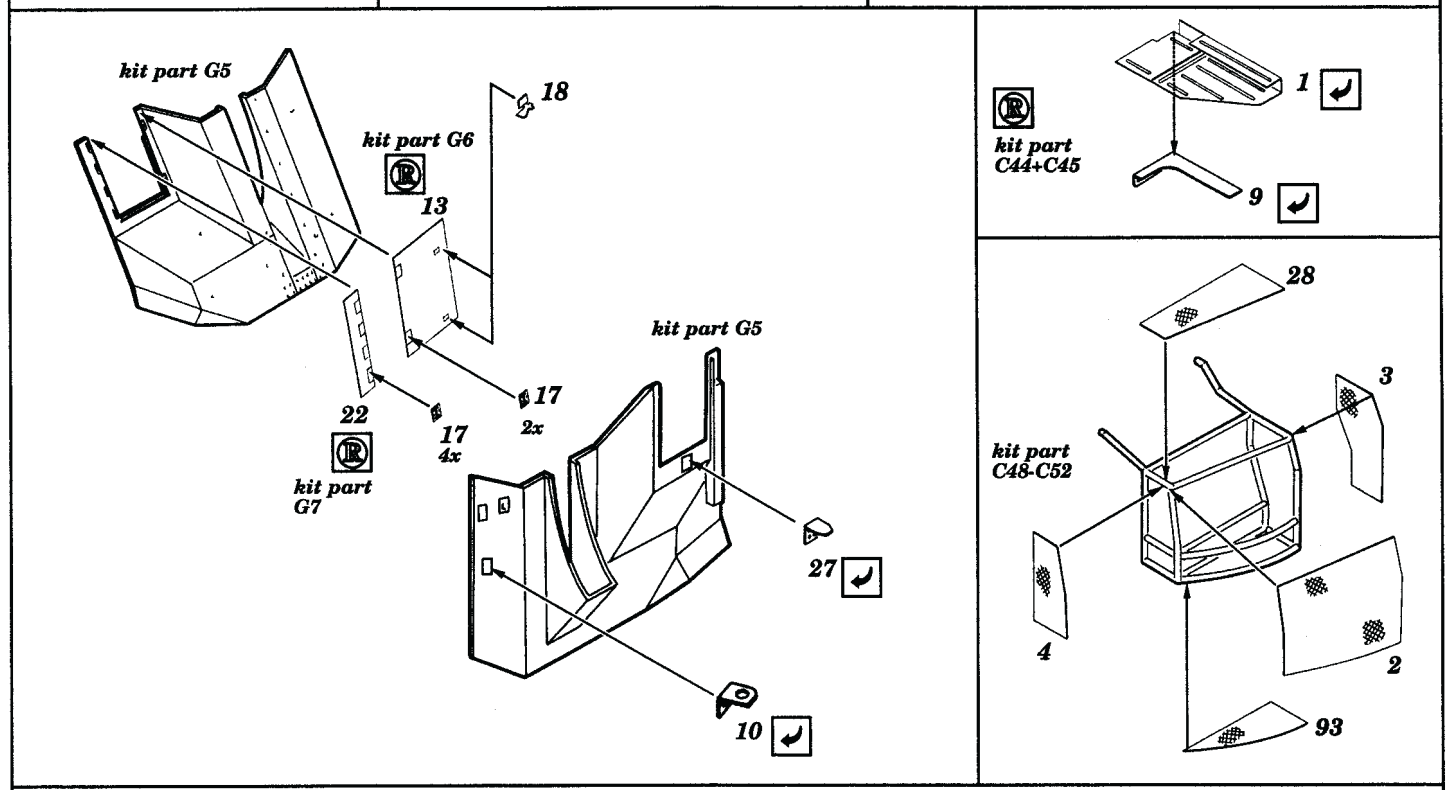
kit part G5
18
kit part G6
13
17
2x
22
17
4x
kit part G7
kit part G5
27
10
kit part C44+C45
1
9
28
3
kit part C48-C52
4
2
93