REPUBLIC F-84F

MONOGRAM®

KIT 5437

1/48 SCALE · MASSSTAB 1:48 · ÉCHELLE 1/48
ESCALA 1/48 · SCALA 1:48 · SCALA 1:48

MONOGRAM MODELS, INC. Morton Grove, Ill. Copyright © 1984 & 1985. All rights reserved. Made in U.S.A. 6437 0200

Following the successful introduction of the North American F-86 Sabrejet, Republic Aviation began development of a swept-wing fighter of its own. In late 1949, a pair of swept wings was mated to the fuselage of a straight-wing F-84E. Designated the YF-96A Thunderstreak, the aircraft was first flown on June 3, 1950. Performance was disappointing, but further development became mandatory when on June 25, the Korean War began.

Redesignated YF-84F, the aircraft was completely redesigned around the Curtiss-Wright J-65 engine, a license-built version of the British Armstrong-Siddeley Sapphire engine. The first prototype flew on February 14, 1951, but due to engine problems and manufacturing delays, the first production F-84F didn't take to the air until November 22, 1952.

The Thunderstreak first served with the Strategic Air Command as a long-range escort fighter for its B-36 bombers. When SAC converted to the eight-jet B-52, its F-84Fs were released to the Tactical Air Command. Here they served until 1958, when replaced by the F-100 Super Sabre. The F-84Fs then went to the Air National Guard.

In 1956, NATO nations began receiving the Thunderstreak through the Military Assistance Program. F-84Fs in NATO service were the first to fire their guns in combat during the Suez Crisis of 1956.

When the 1961 crisis over West Berlin erupted, four wings of Air National Guard F-84Fs were put on active duty. These remained in service with the Air Force until 1964, when replaced for the last time by the F-4 Phantom. The last Air National Guard aircraft were scrapped in 1971 due to structural corrosion, and they too were replaced by the F-4.

The Thunderstreak had a maximum speed of 695 miles per hour at sea level and a service ceiling of 44,300 feet. It carried six .50 caliber machine guns and 6,000 pounds of bombs or a tactical nuclear weapon.

READ THIS BEFORE YOU BEGIN

- Study the assembly drawings.
- Each plastic part is identified by a number.
- Check the fit of each piece before cementing in place.
- Do not use too much cement for vinyl parts.
- Use only cement for polystyrene plastic.
- Model may be painted to match choice on box.
- Allow paint to dry thoroughly before handling parts.
- Scrape paint from areas to be cemented.
- For better paint and decal adhesion, wash the plastic parts in a mild detergent solution. Rinse and let air dry.

ALLGEMEINE HINWEISE

- Die Anordnung der Bauteile ist aus den Zeichnungen der Anleitung ersichtlich.
- Jedes Plastikteil ist durch eine Nummer gekennzeichnet.
- Die Teile vor dem Verkleben ungeleimt zusammenhalten, um ihren Passform zu prüfen.
- Klebstoff nicht zu dick auftragen.
- Nur Model Toolkleber für Polystirol verwenden.
- Man kann das Modell nach den Farben auf der Schachtel anstreichen.
- Bemalte Teile vor der Weiterverwendung gut trocknen lassen.
- Die Farbe muss von allen spaltenden Klebestellen abgeschabt werden.
- Damit die Farbe und die Abziehbilder besser haften, sind die Plastikteile in einer milden Detergenzlösung zu waschen. Dann abspülen und an der Luft trocknen lassen.

LEA ESTO ANTES DE EMPEZAR

- Estudie los dibujos de ensamblaje.
- Cada pieza de plástico se identifica por un número.
- Verifique que cada pieza encaje bien antes de pegarla en posición.
- No use demasiado pegamento para unir las piezas.
- Use únicamente pegamento para plástico de polestirena.
- El modelo puede pintarse de acuerdo con las fotografías de la caja.
- Permita que se seque la pintura completamente antes de tocar las piezas.
- Raspe la pintura de las superficies que van pegadas.
- Para una mejor fijación de la pintura y de las calcomanías, lavanse las piezas plásticas en una solución de detergente suave. Enjuáguense y déjanse secar al aire.

LEES DIT ALVORENS TE BEGINNEN

- Bestudeer de bouwtekening.
- Elk plastic onderdeel is genummerd.
- Controleer de passing van elk deel voor u ermee begint.
- Gebruik niet te veel lijm.
- Alleen lijm voor polystyreen plastic gebruiken.
- Men kan model verven zoals aangeduid op de doos.
- Laat de verf van de te verwerken delen steeds goed drogen.
- Verwijder de verf van de lijmen oppervlakken.
- Zorgt de verf en stickers beter zullen plakken, was de plastiek delen in een milde wasmiddeloplossing. Spoel en laat in de open lucht droogen.

LISEZ CE QUI SUIT AVANT DE COMMENCER LE MONTAGE

- Étudier les schémas d'assemblage.
- Chaque pièce plastique porte un numéro d'identification.
- Contrôler que chaque pièce est bien conforme avant de la coller à sa place.
- N'utilisez pas trop de colle pour réunir les pièces.
- Utiliser uniquement une colle spéciale pour polystyrène.
- Le modèle peut être peint conformément aux photos sur la boîte.
- Laissez sécher la peinture complètement avant de manipuler les pièces.
- Gratter la peinture sur les surfaces devant être collées.
- Pour assurer la meilleure adhésion possible de la peinture et des décalcomanies, avec les pièces en plastique avec une légère solution savonneuse. Rincer et laisser sécher à l'air.

LÄS DET HÄR INNAN DU BORJAR BYGGA

- Studera monteringsritningarna.
- Alla plastdelar har identifikationsnummer.
- Kolla noga att delarna passar bra innan ihopmontering.
- Sparsamt med lim för polystyren-plast.
- Modellen kan målas enligt fotona på kartongen.
- Låt färgen torka ordentligt före hantering.
- Skrapa bort färgen på de ytor som ska limmas.
- För bättre vidhäftning av färg och dekalmärken tvätta plastdelarna i en mild tvålmedelslösning. Skölj och torka torka.

DA LEGGERE PRIMA DI INIZIARE

- Studiare le illustrazioni.
- Ogni pezzo è identificato con un numero.
- Controllare l'incastro di ogni pezzo prima di incollarlo.
- Non usare troppa colla per unire i pezzi.
- Adoperare solamente colla per materie plastiche.
- Il modello si può dipingere seguendo le fotografie sulla scatola.
- Aspettare che la vernice sia completamente asciutta prima di maneggiare le parti.
- Asportare la vernice dai punti dove applicare la colla.
- Per una migliore aderenza di vernice e decalcomanie, lavare le parti in plastica in soluzione detergente non abrasiva. Risciacquare e lasciare asciugare all'aria.

A	ALUMINUM	ALUMINIUM/GRAUES	ALUMINIO	ALUMINIUM/WELLEN	ALUMINIUM	ALUMINIUM/GRAUES	ALUMINIO
B	DUNK GREEN	DUNKELGRÜN	VERDE OSCURO	DONKERGROEN	VERT FONCÉ	OLIVGRÜN	VERDE OSCURO
C	YELLOW	GELB	AMARILLO	GEEL	JAUNE	GELB	GIALLO
D	DARK BROWN	DUNKELBRAUN	MARRON OSCURO	DONKERBRUIN	BRUN FONCÉ	DUNKELBRAUN	MARRONE OSCURO
E	TEAL BLUE	[illegible]	AZUL PETROLEO	BLAUWGROEN	BLEU TURQUOISE	MATTGRÜNBLAU	VERDE PAVO
F	[illegible]	[illegible]	[illegible]	GREEN METALLIC	VERT METALLIQUE	GRÜN METALLIC	VERDE METALICO
G	RED	ROT	ROJO	ROOD	ROUGE	ROT	ROSSO
H	LIGHT GRAY	HELLGRAU	GRIS CLARO	LICHTGRIJS	GRIS CLAIR	HELLGRAU	GRIGIO CHIARO
J	GREEN	GRÜN	VERDE	GROEN	VERT	GRÜN	VERDE
K	METALLIC	METALLIC	METALICO	METALLIEK	METALLIQUE	METALLICGRAU	METALICO

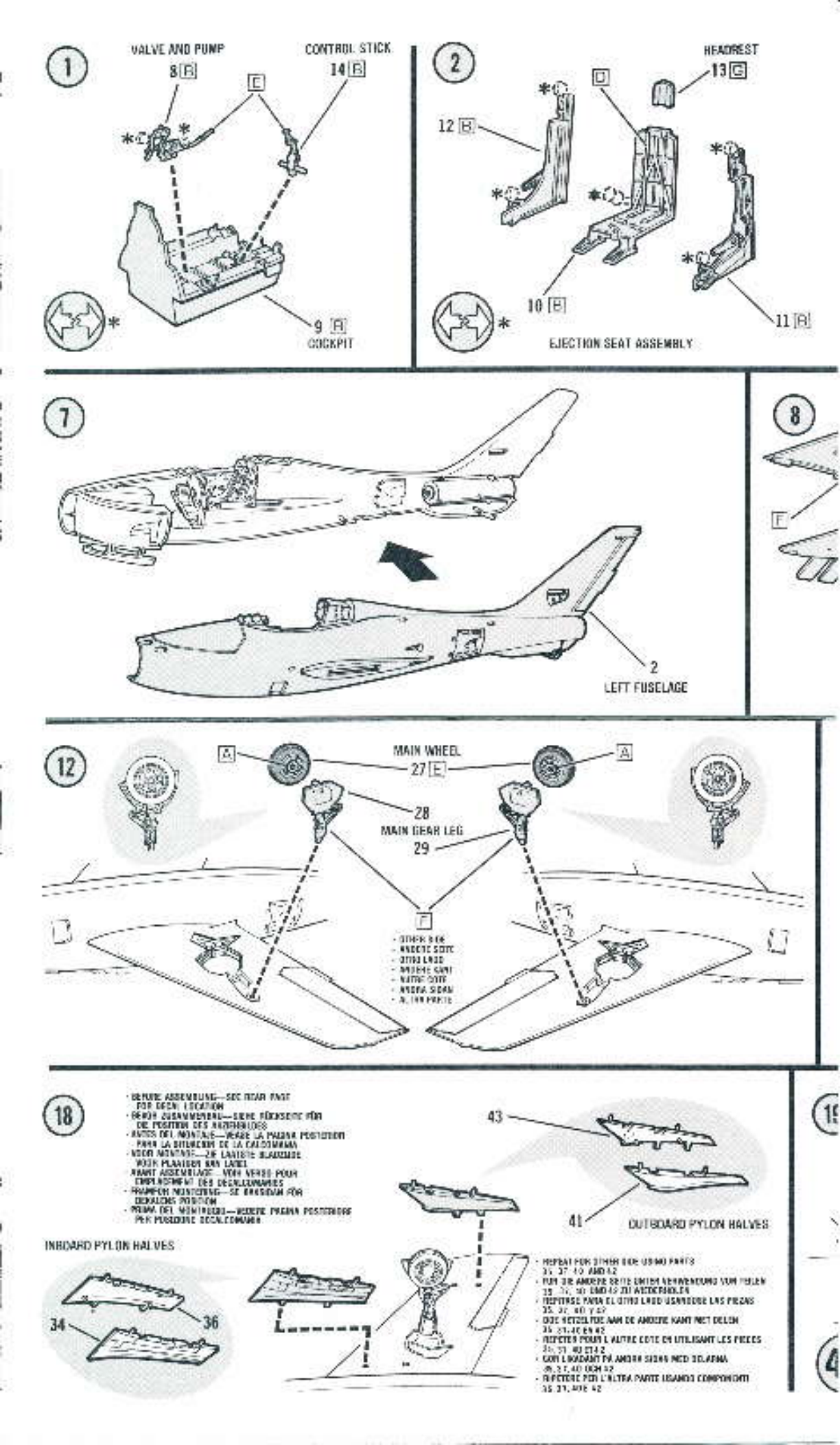
1
VALVE AND PUMP
8 B
CONTROL STICK
14 B
E
9 A
COCKPIT
2
HEADREST
13 G
D
12 B
10 B
11 B
EJECTION SEAT ASSEMBLY
7
2
LEFT FUSELAGE
8
E
12
A
MAIN WHEEL
27 E
A
28
MAIN GEAR LEG
29
F
18
43
41
OUTBOARD PYLON HALVES
INBOARD PYLON HALVES
34
36

3

INSTRUMENT PANEL

15

4

ARM

58

B

1

RIGHT FUSELAGE

4

WING TOP

3

F

5

WING BOTTOM

6

9

13

31

MAIN GEAR DOOR

E

30

14

RETRACTION CYLINDER

63

BRACES

48

X

20

68

69

52

54

56

55

53

E

BOMB CART ASSEMBLY D

21

FUEL TANK HA

39

38

57
PILOT

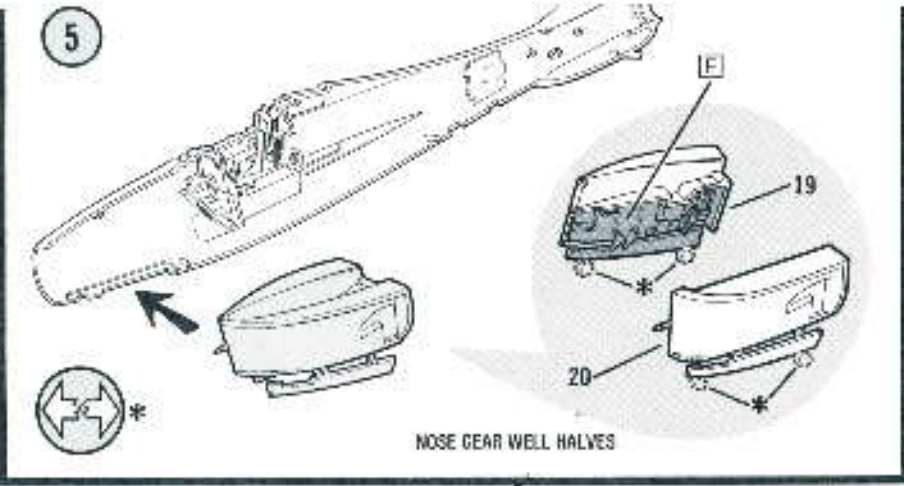
5
F
19
20
NOSE GEAR WELL HALVES

6

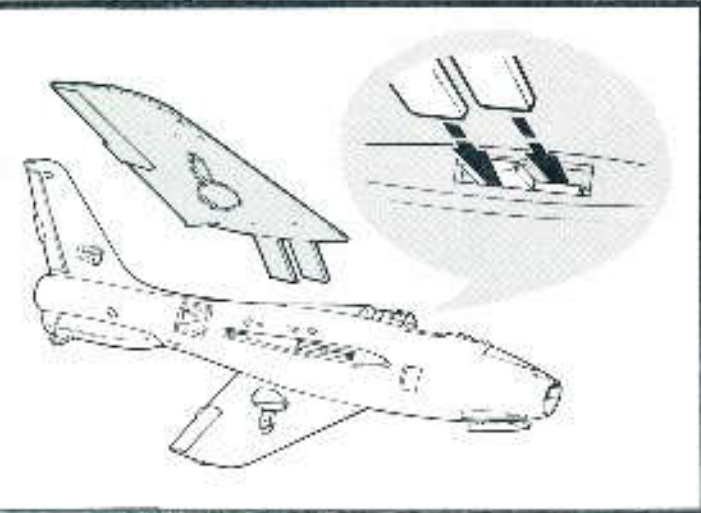

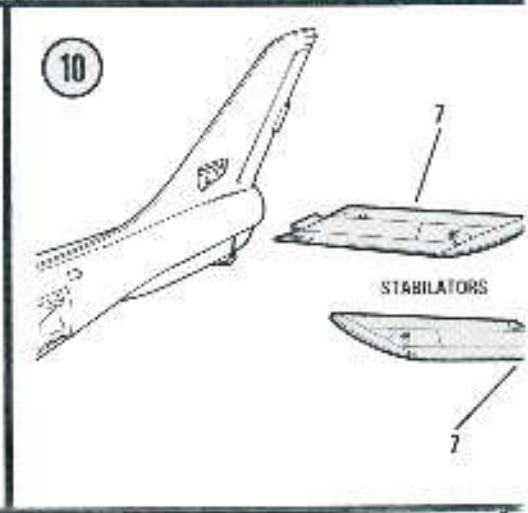
10
7
STABILATORS
7

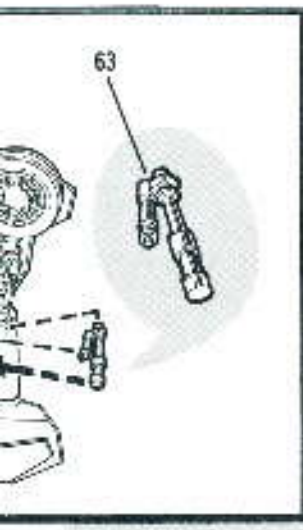
63

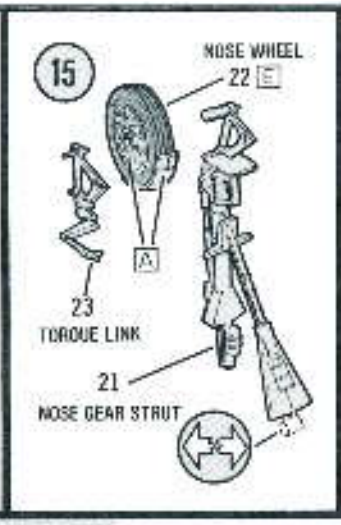
15
NOSE WHEEL
22 E
A
23
TORQUE LINK
21
NOSE GEAR STRUT

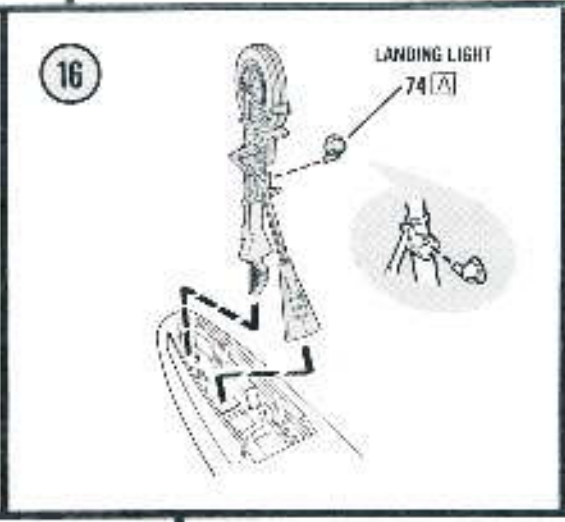
16
LANDING LIGHT
74 A

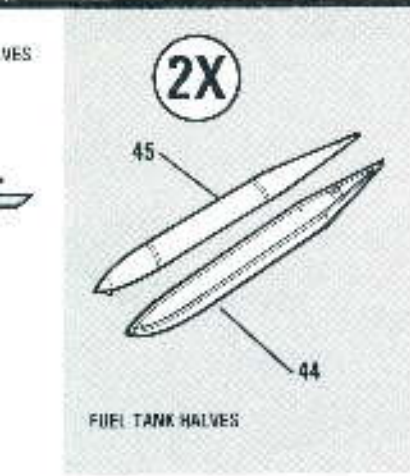
2X
45
44
FUEL TANK HALVES

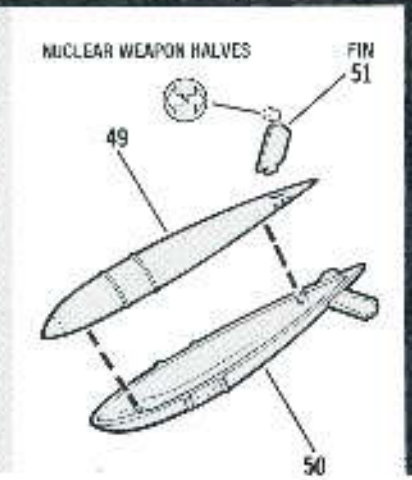
NUCLEAR WEAPON HALVES
FIN
51
49
50

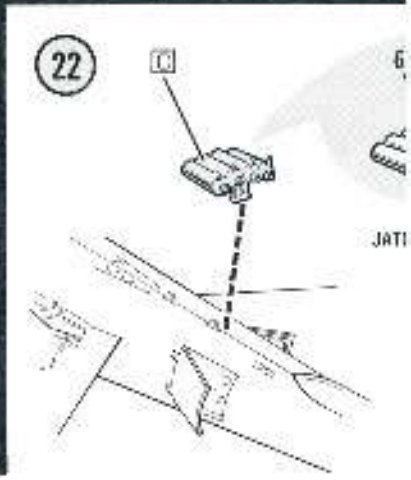
22
C

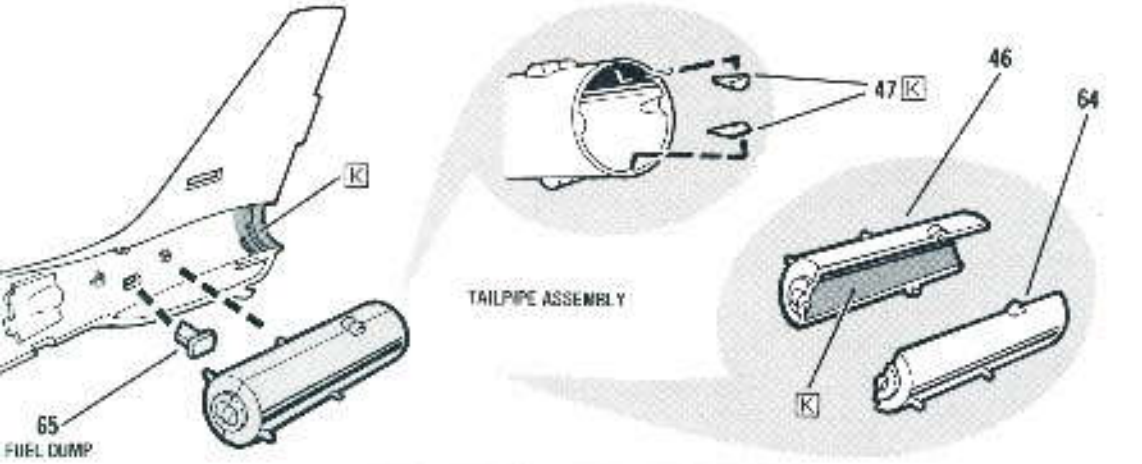
K
65
FUEL DUMP
47 K
46
64
TAILPIPE ASSEMBLY
K

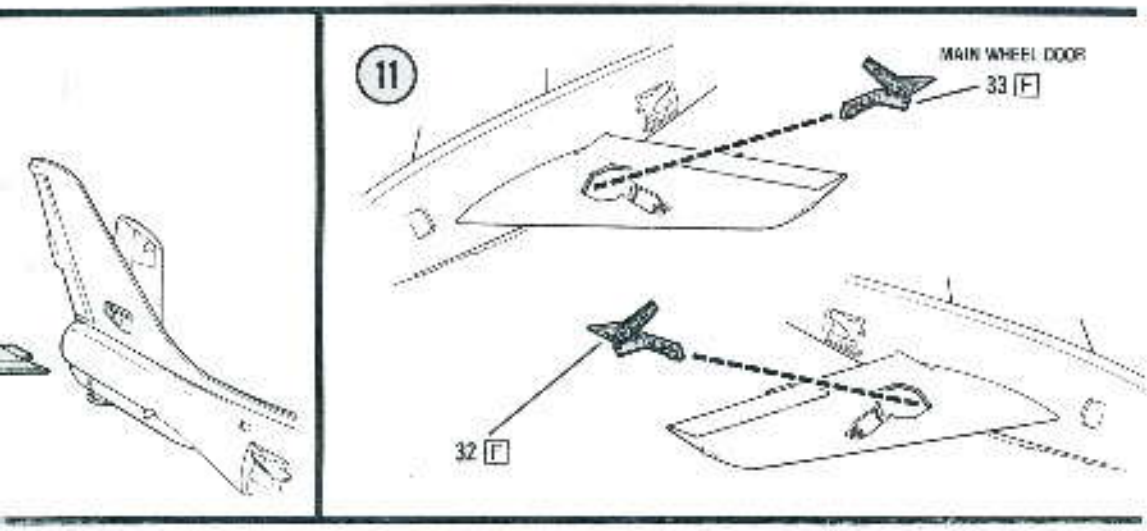
11
MAIN WHEEL DOOR
33 F
32 F

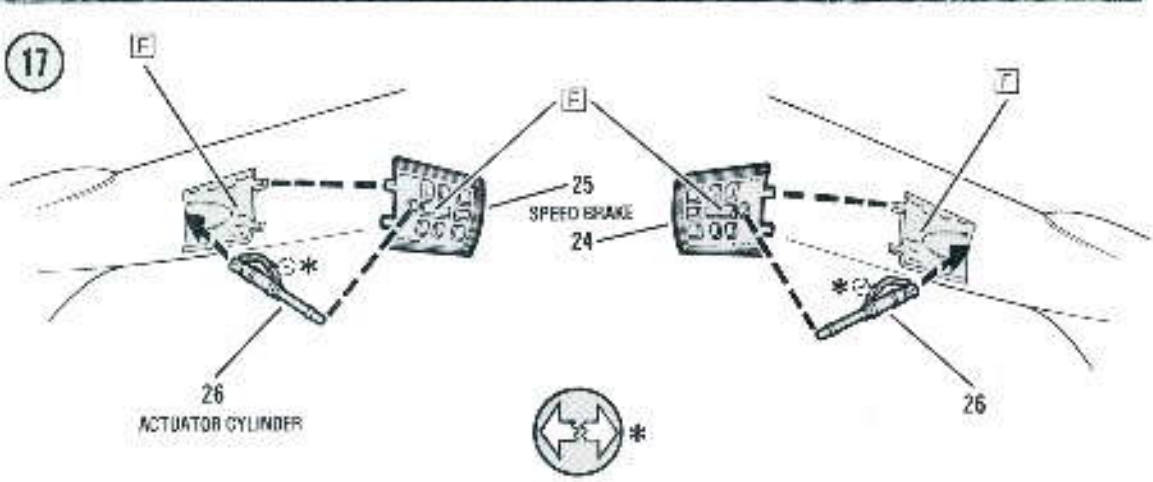
17
F
F
F
25
SPEED BRAKE
24
26
ACTUATOR CYLINDER
26
*

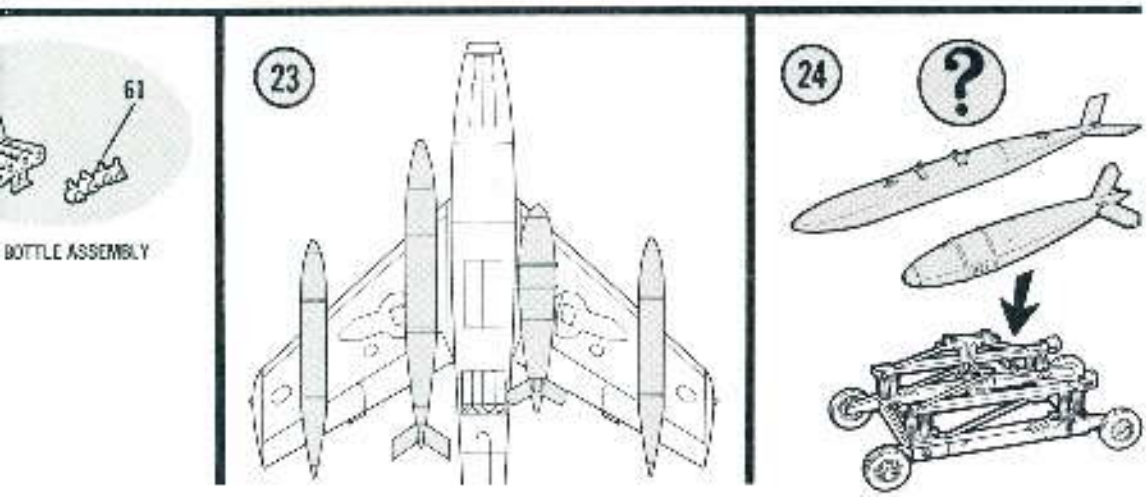
61
BOTTLE ASSEMBLY
23
24
?

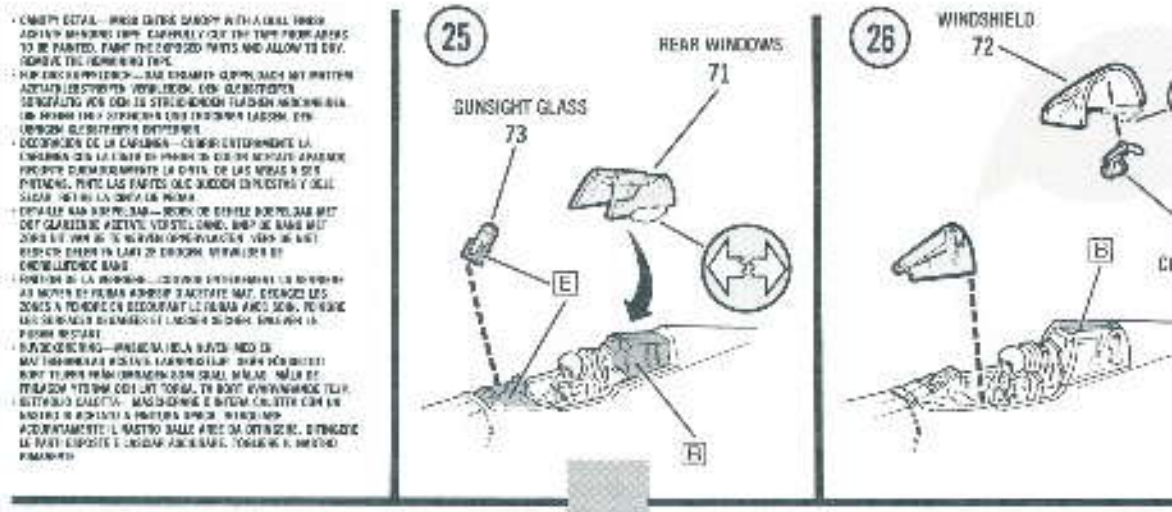
25
REAR WINDOWS
71
SUNSIGHT GLASS
73
E
B
26
WINDSHIELD
72
B

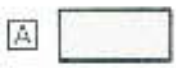
A

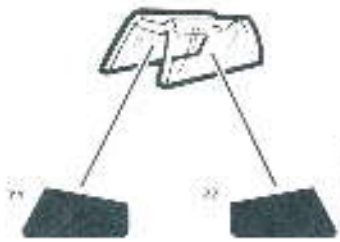

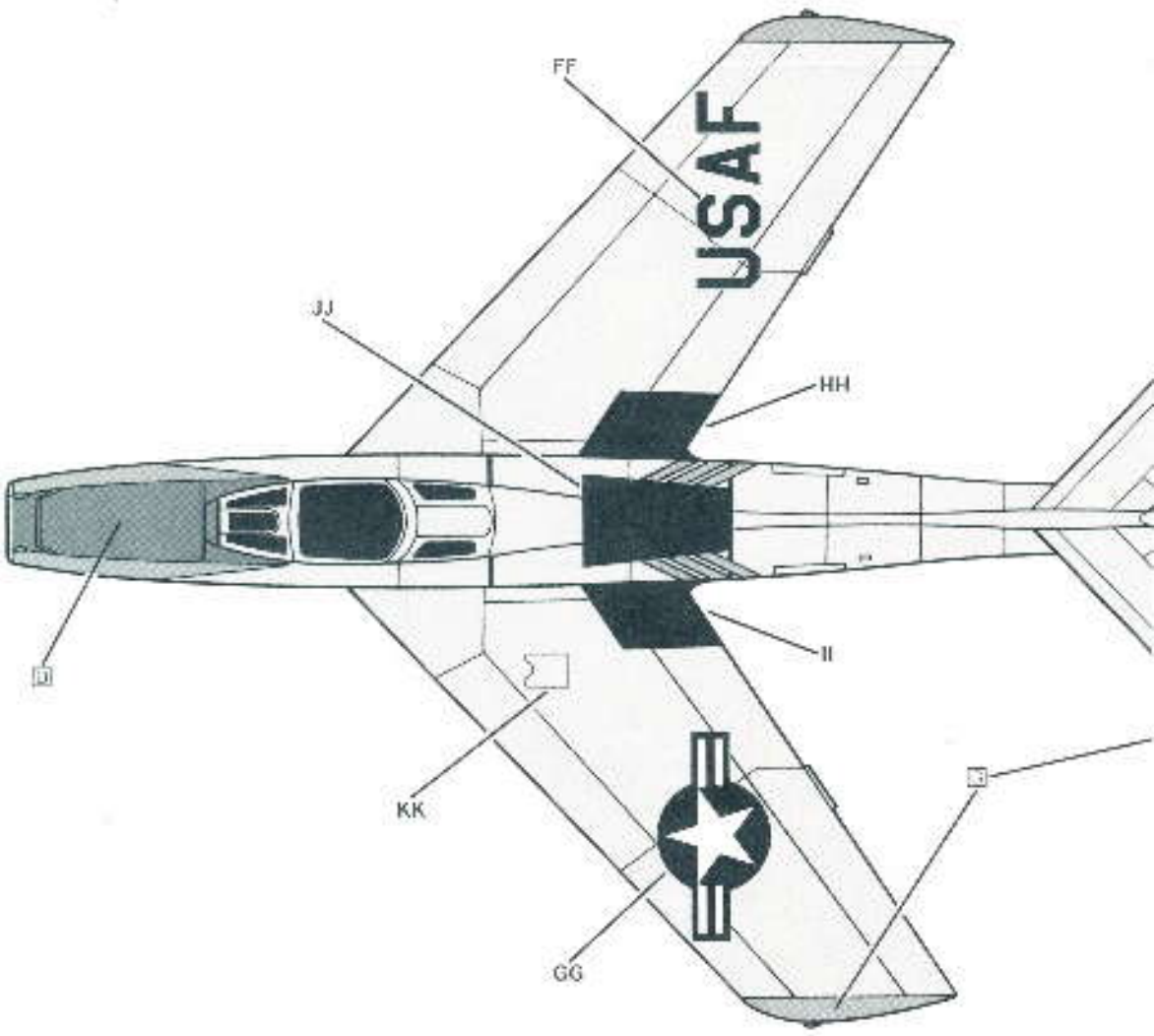
FF
USAF
JJ
HH
D
II
KK
GG

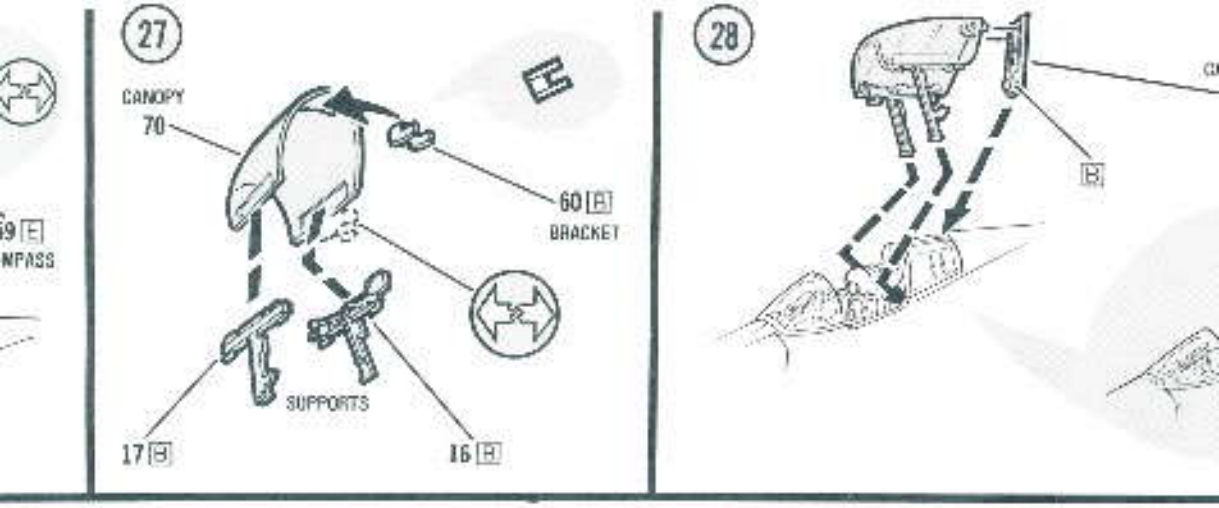
27
CANOPY
70
60 B
BRACKET
SUPPORTS
17 B
16 B
28
B

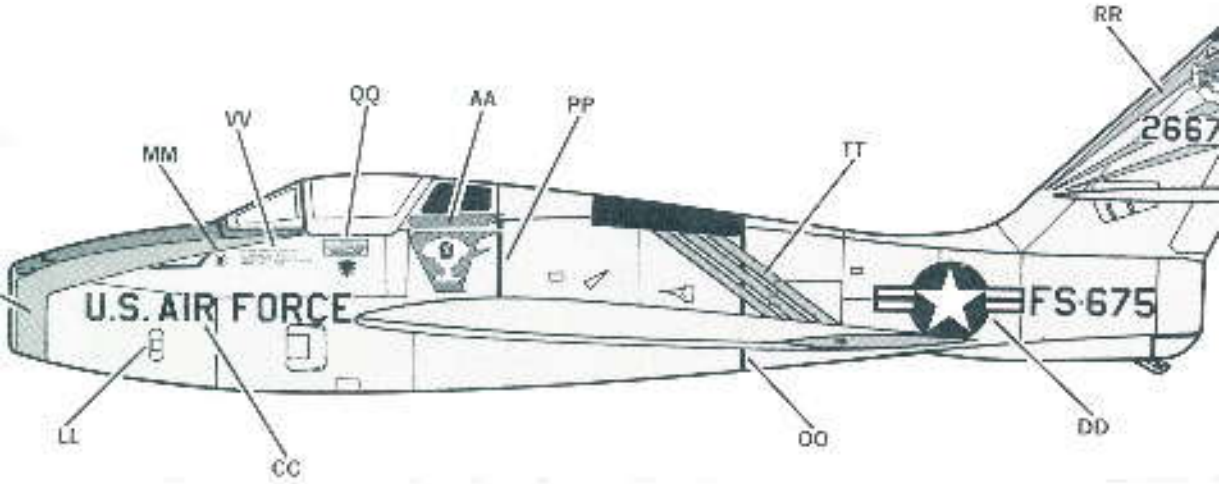
RR
QQ
AA
PP
VV
MM
TT
U.S. AIR FORCE
FS-675
LL
CC
OO
DD

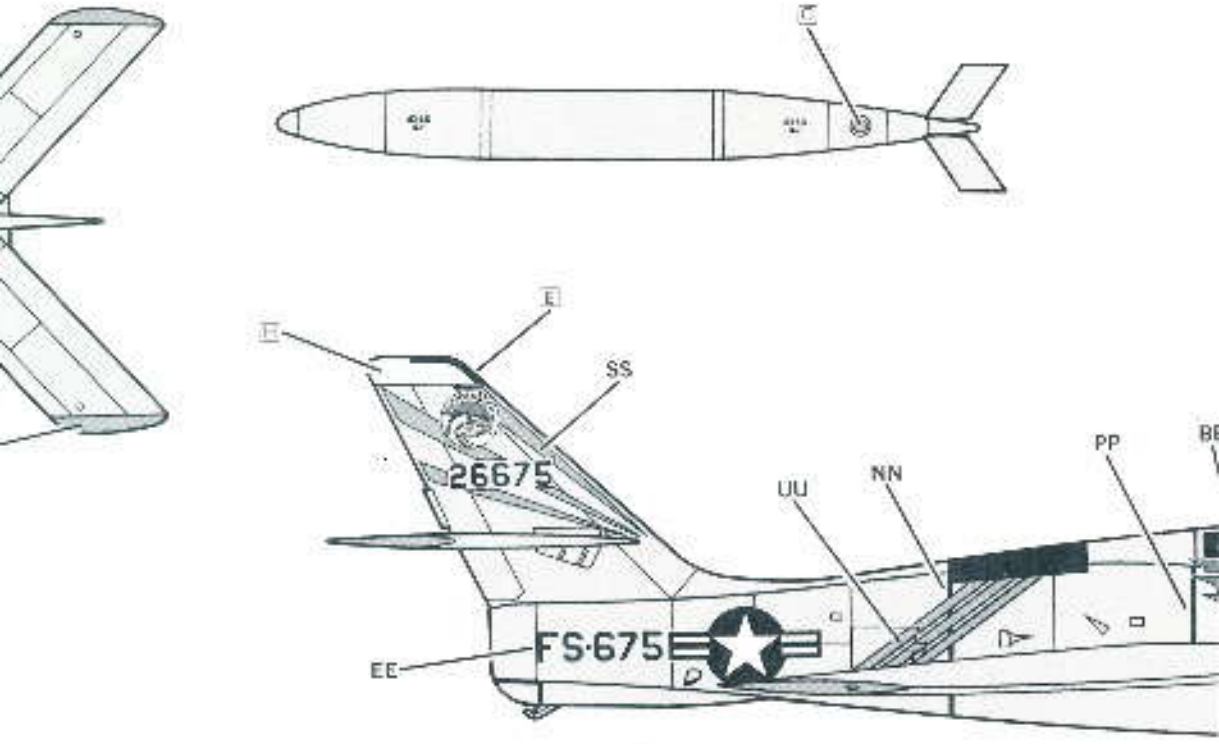
C
E
E
SS
26675
PP
UU
NN
FS-675
EE

OPY HINGE
—18

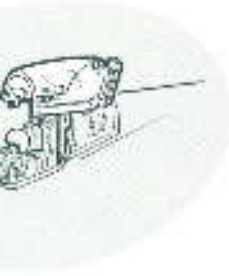

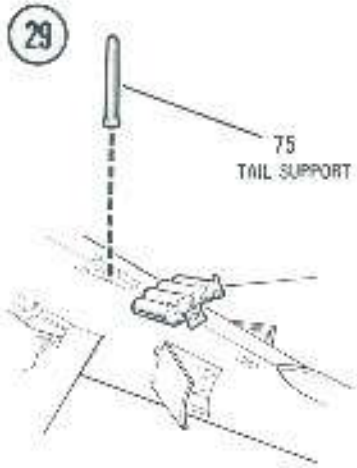
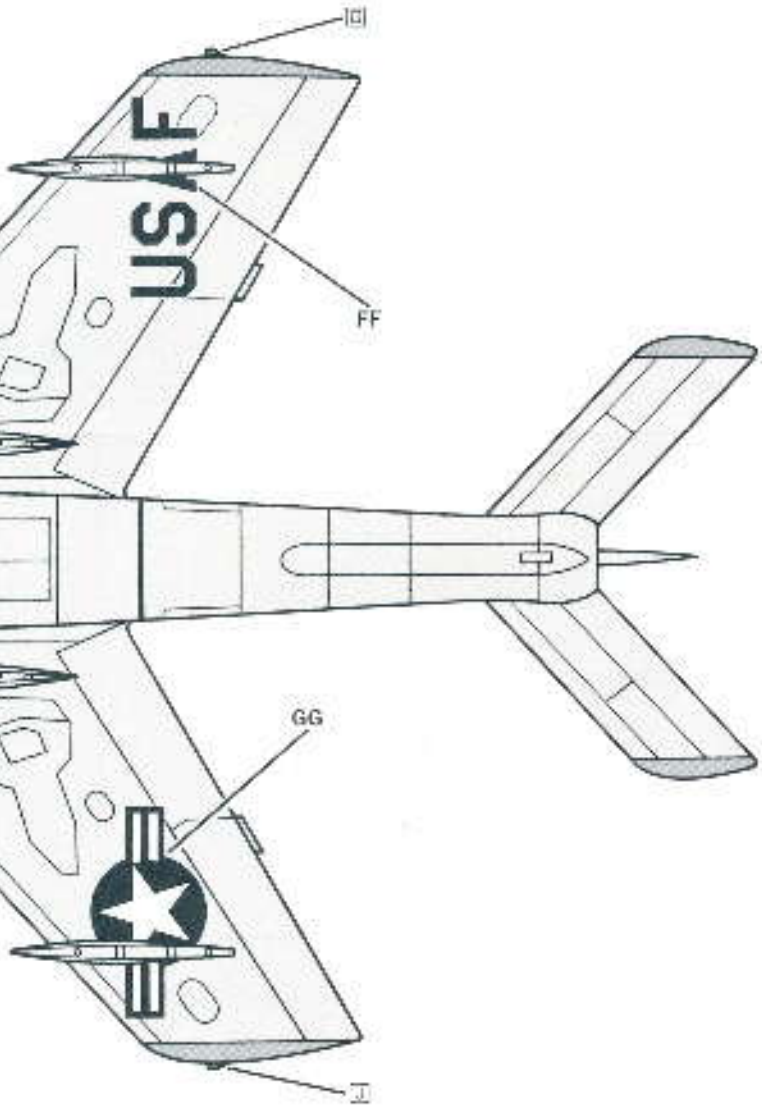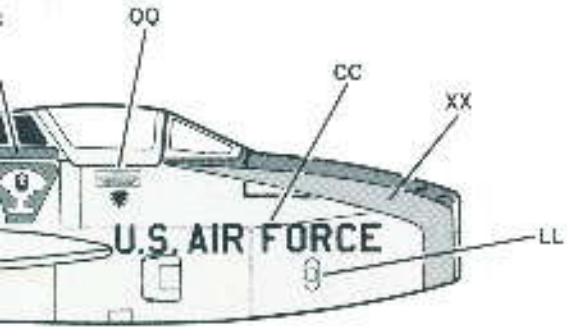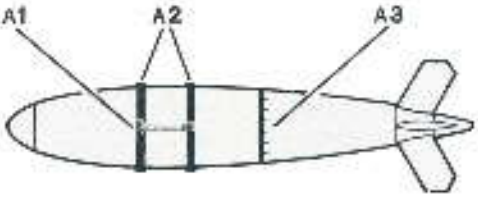
- REMAINING PARTS MAY BE DISCARDED.
- DIE ÜBRIG BLEIBENDEN TEILE WERDEN NICHT MEHR BENÖTIGT.
- LAS PIEZAS QUE SOBREN PUEDEN DESCARTARSE.
- DE OVERBLIJVENDE STUKJES KUNNEN WEGGEGOOID WORDEN.
- SE DEPARE DES PIECES RESTANTES.
- DVERBLIVNE DELAR MAKULERAS.
- SCARTARE PARTI RIMANENTI