SPH Sd.Kfz.124 Wespe

35 126

1/35 scale detail set for Tamiya kit

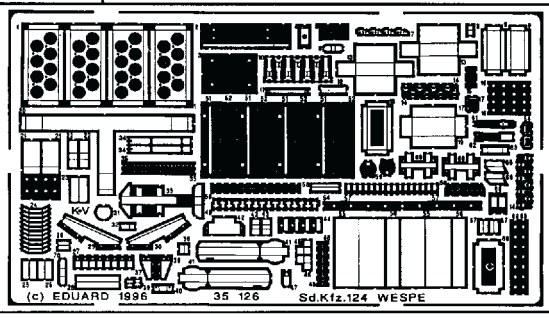

OPPOSITE SIDE
REMOVE
REPLACE

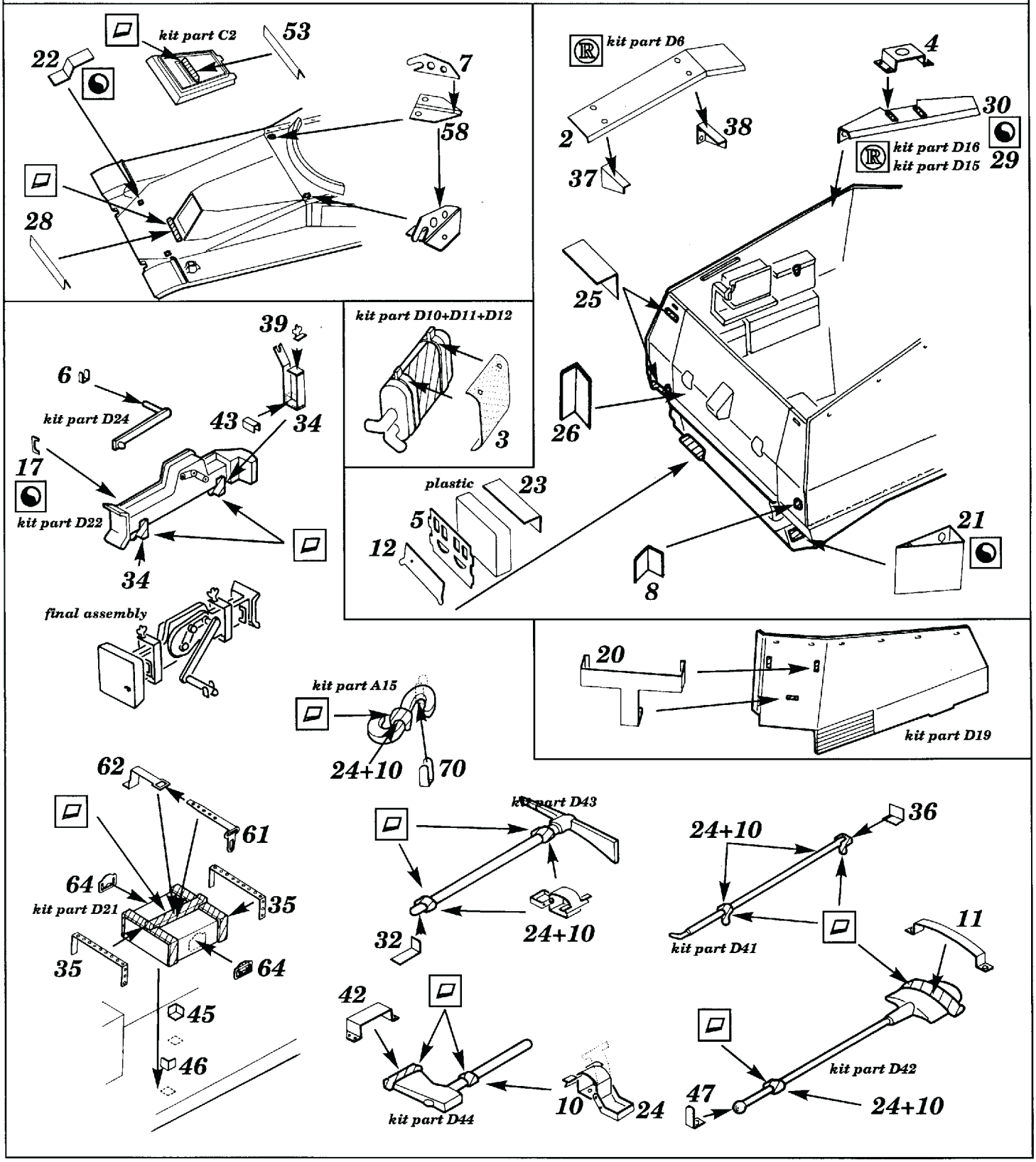

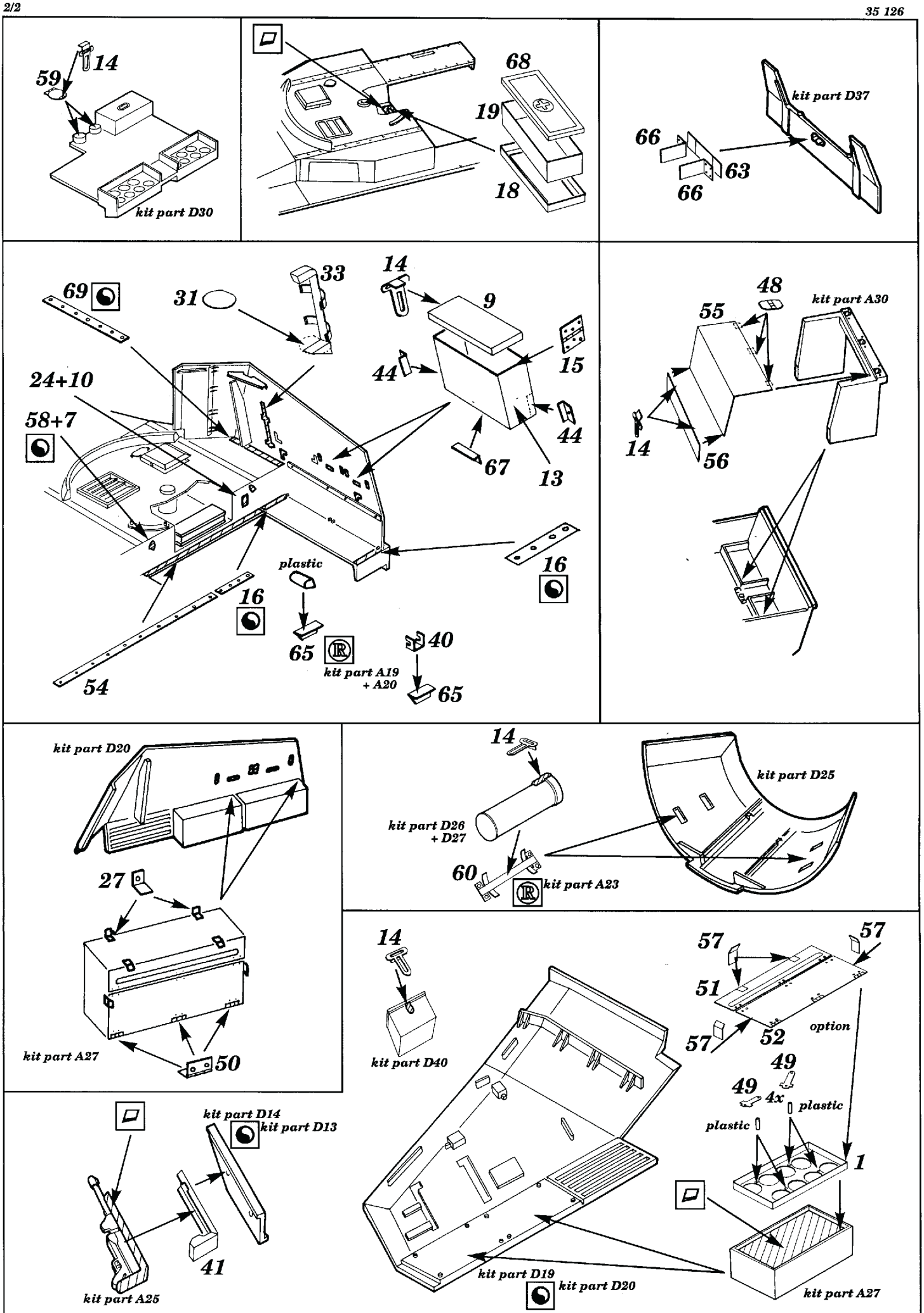

(c) EDUARD 1996

Made in Czech Republic