True Details #49006
Spitfire Mk 22/24 Cockpit Set

1/48 Scale, Ex-KMC 48-6020

For Airfix Kits, Copyright 2003 True Details

Preparation

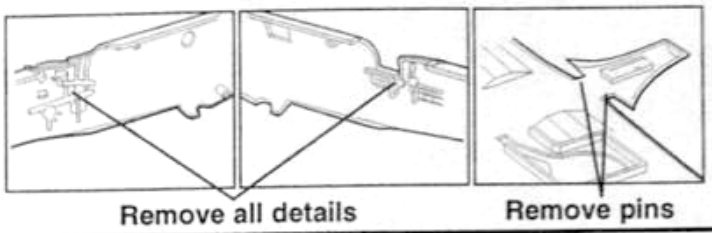

Parts Map

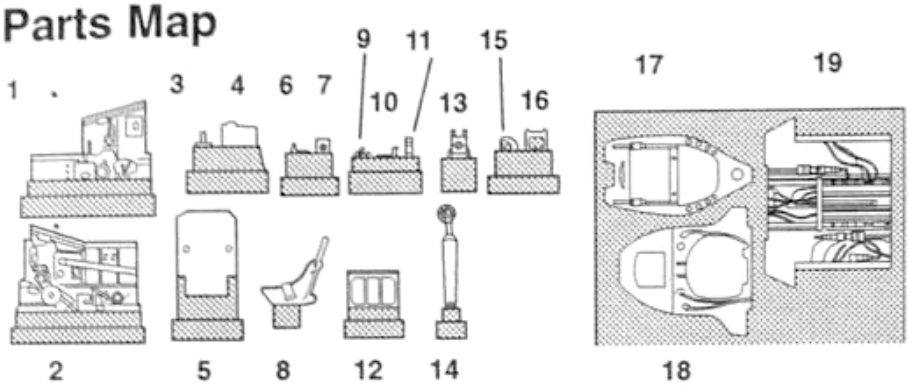

Colors

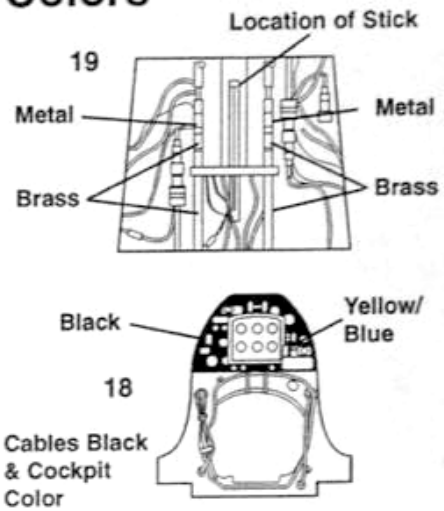

Overall Cockpit Color is RAF Interior Grey-Green (FS34226)

Seat & Frame Assembly

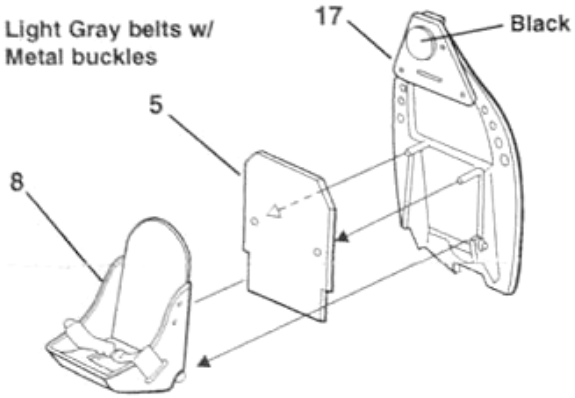

Sidewall Preparation

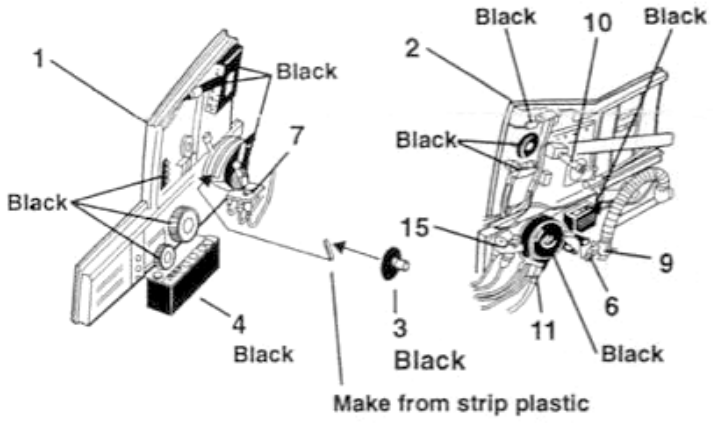

Cockpit Assembly

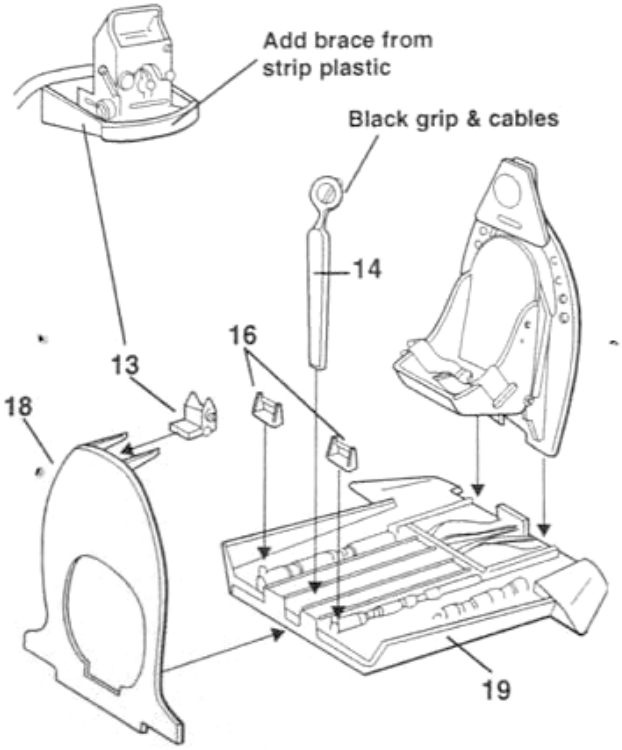
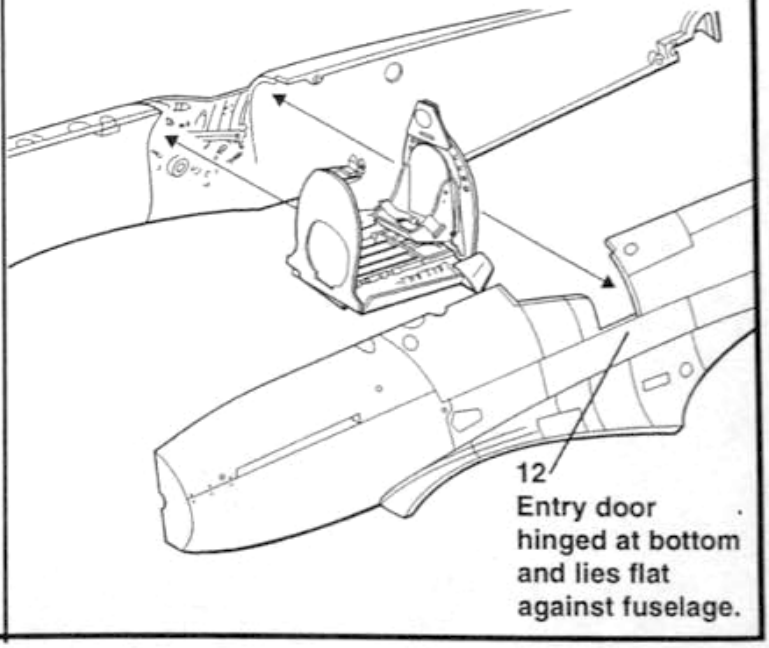
Final Assembly