TIONS, IN
DRIVE
ON, USA

718

5600

Scale

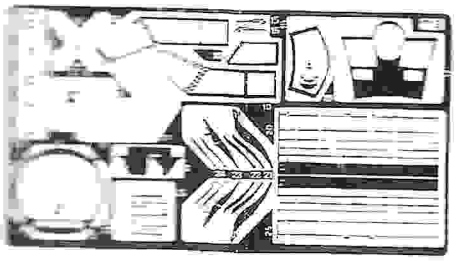

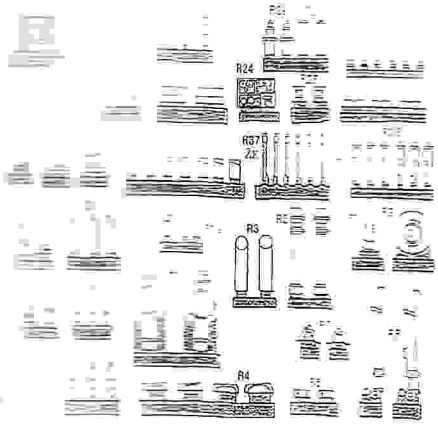

with plastic surface parts and
that adhesives can only be
cyanoacrylate
(super glue)
Thoroughly clean the parts
before gluing.
READ BEFORE ASSEMBLY
This instruction sheet indicates
the use of the VP Update Set
series. It does not replace the
instruction sheet of the plastic
which needs to be
purchased in combination with
this Update Set. This sheet
merely indicates the proper
sequence of gluing the VP
parts. Every individual should
determine at which stage of
the assembly the VP parts are
needed. It is advised to study
both instruction sheets before
you start assembly.
PAINTING INSTRUCTIONS:
Since the parts of this VP set
are designed to only UPDATE
your plastic kit, the painting
directions of the plastic kit
should be followed

Resin Parts
(Remove shaded areas)

printed for VERLINDEN PRODUCTIONS
Ondernemerstraat 4 B-2500 LIER/BELGIUM

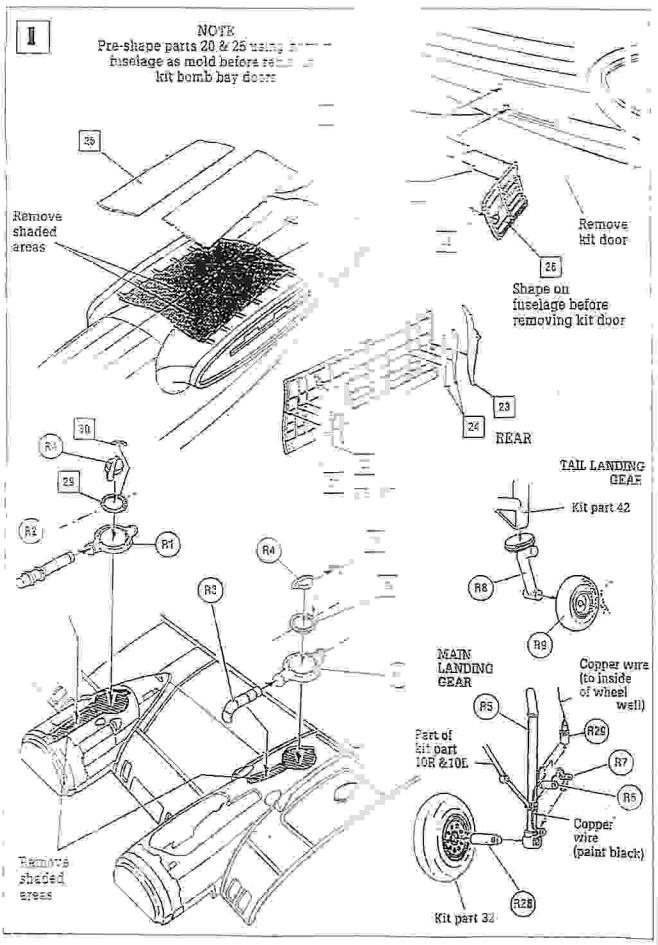
I
NOTE
Pre-shape parts 20 & 25 using
fuselage as mold before
kit bomb bay doors
25
Remove shaded areas
30
R4
29
R2
R1
R4
R3
Remove shaded areas

Remove kit door
26
Shape on fuselage before removing kit door
23
24
REAR
TAIL LANDING GEAR
Kit part 42
R8
R9
MAIN LANDING GEAR
Copper wire (to inside of wheel well)
R5
R28
Part of kit part 10R &10L
R7
R6
Copper wire (paint black)
R28
Kit part 32

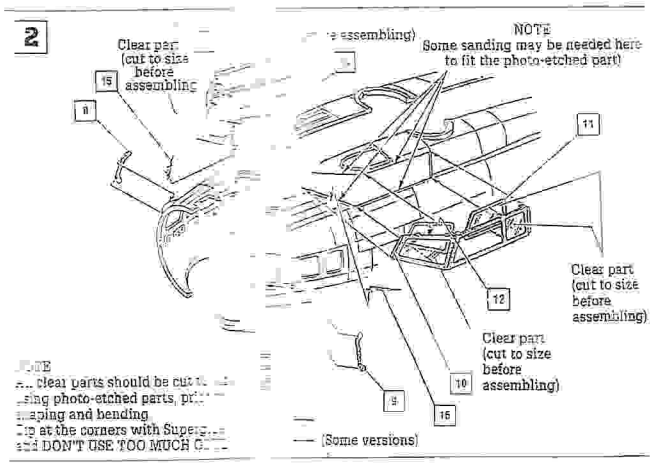
2
Clear part
(cut to size
before
assembling
15
8
NOTE
Some sanding may be needed here
to fit the photo-etched part)
11
Clear part
(cut to size
before
assembling)
12
Clear part
(cut to size
before
assembling)
10
9
16
(Some versions)

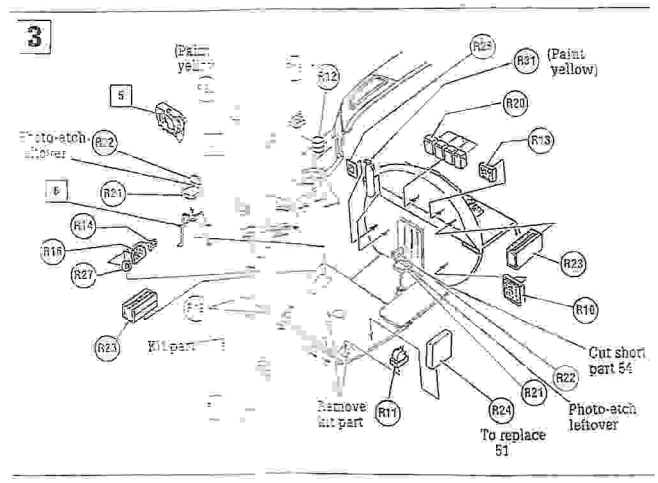
3
(Paint
yellow)
5
R12
R29
R31
(Paint
yellow)
R20
R13
R22
R21
R14
R15
R27
R23
R10
Cut short
part 54
R22
R21
Remove
kit part
R11
R24
To replace
51
Photo-etch
leftover