AH-64D BLOCK II LATE VERSION

APACHE LONGBOW

ATTACK HELICOPTER

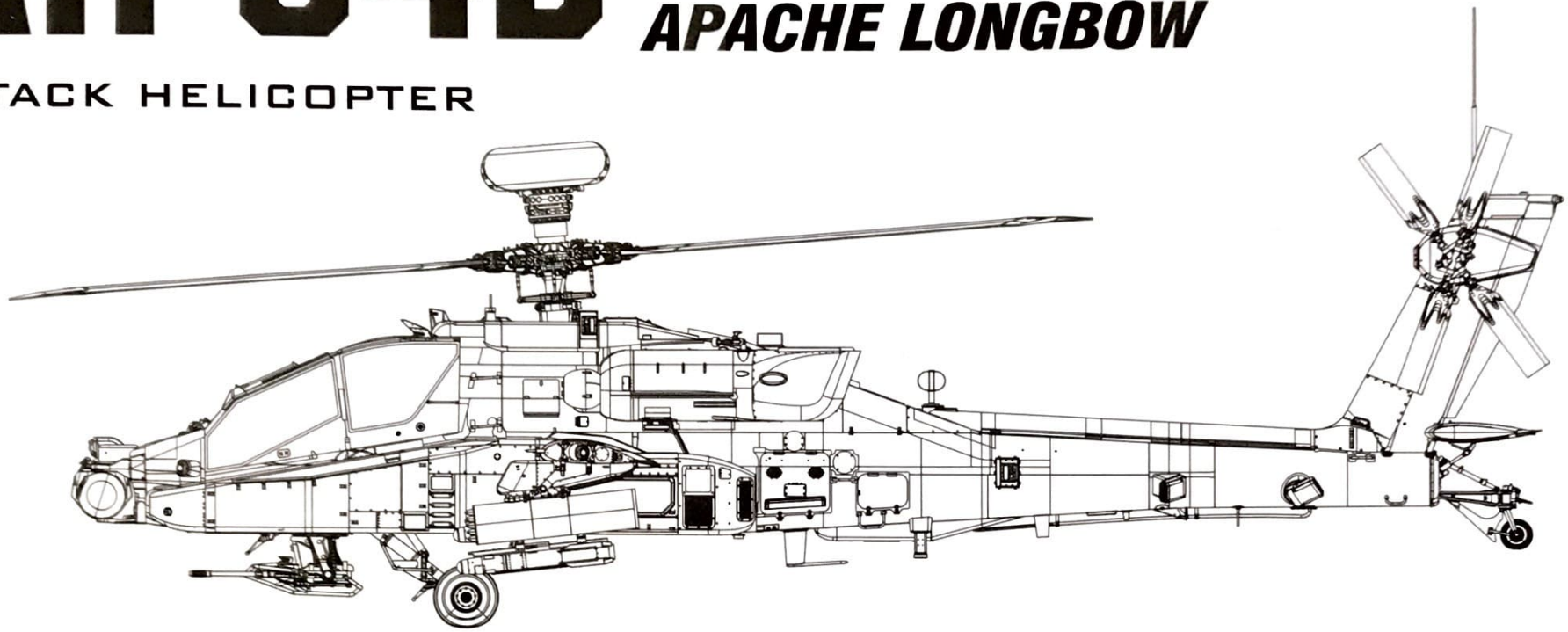

Beginning in the late 1980s, the US Army planned a series of upgrades to its AH-64A fleet. In 1992 McDonnell Douglas converted four AH-64As into prototypes for the variant designated AH-64D. The designations AH-64B and AH-64C for interim variants were later dropped so that the AH-64D became the second operational Apache variant.

The main upgrade focused on the Northrop Grumman AN/APG-78 Longbow millimeter-wave fire-control radar (FCR) target acquisition system and the Radar Frequency Interferometer (RFI) housed in the radome mounted on the mast above the main rotor shaft. This allows the AGM-114L to be fired in an autonomous fire-and-forget mode, whereas the laser-guided Hellfire requires external designation or use in conjunction with the TADS, and as such is a line-of-sight weapon. The AN/APG-78 radar can detect, classify and prioritize 12 targets simultaneously, and can see through the fog and smoke that currently disrupts infra-red and TV sensors. The AH-64D also features improvements in targeting, battle management, cockpit, communications, weapons and navigation systems. The forward avionics bay was expanded, and the landing gear fairings were extended forward to accommodate some of the new equipment. This gunship can carry a total of 16 AGM-114L Hellfire 2 anti-tank missiles and can also carry 2 AGM-122 Sidearm air-to-ground anti-radiation missiles. For self-defense against other aircraft, the Longbow Apache can carry 4 AIM-92 Stinger, 4 Mistral, or 2 AIM-9 Sidewinder short-range air-to-air missiles.

Entering service in 1995, early aircraft lack the radar system fitted to the definitive AH-64D Longbow Apache that followed from 1997. Early in 1999 the US Army finally decided that 530 AH-64As would be upgraded to D standards, for which 500 Longbow systems were procured. Starting with Lot 7 and continuing through the remainder of the planned conversions, AH-64Ds are now being delivered to the service in the Apache Extended Block II (EB2) configuration, which includes new avionics, digital enhancements, and upgraded communications systems. The initial Block II aircraft was delivered to the Army in February 2003.

03.02.2608

READ BEFORE ASSEMBLY

CAUTION

●Read carefully and fully understand the instructions before commencing assembly. A supervising adult should also read the instructions if a child assembles the model.
●When assembling this kit,tools including knives used.Extra care should be taken to avoid personal injury.
●Keep out of reach of small children.Children must not be allowed to suck any part, or pull vinyl bag over their heads.

Be Careful

Optional

Do Not Cement

Drill

Remove

Instant Glue for Metal

APPLYING DECALS

1.Clean the model surface with a wet cloth.
2.Cut out each decal design from sheet,and dip it in tepid water for 15~20 sec.
3.Hold the backing sheet edge and slide decal onto the model.
4.Move decal into position by wetting decal with finger.
5.Press decal gently down with a soft cloth until excess water and air bubbles are gone.

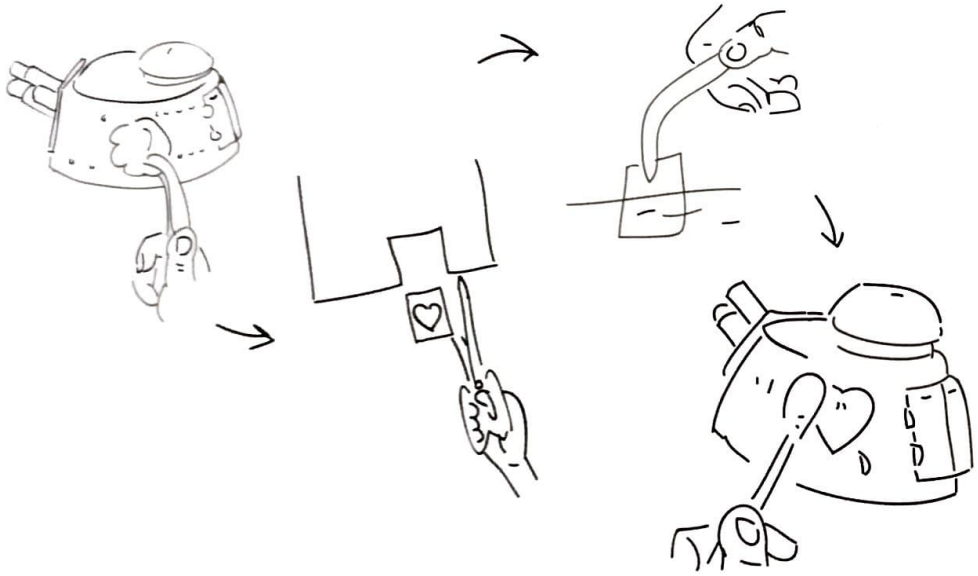

REMOVING PE

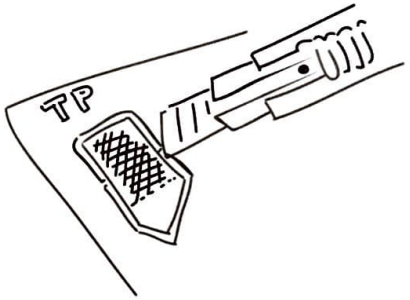

Be careful not to hurt when removing PE parts.

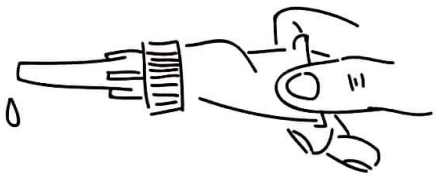

Secure using instant glue (not included).

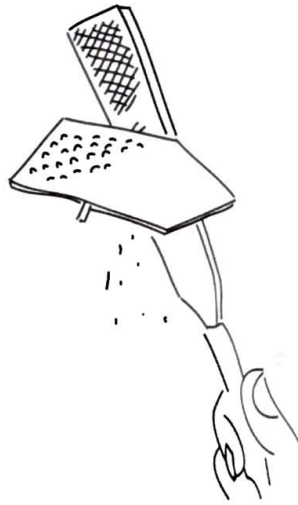

Finish using file.

PARTS

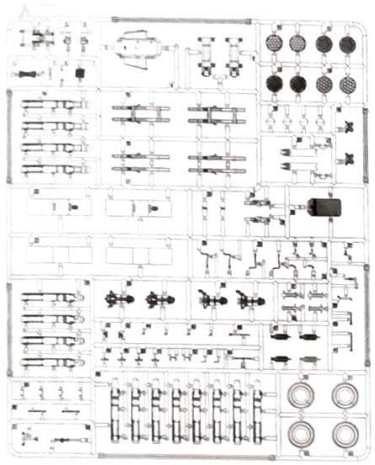

X2

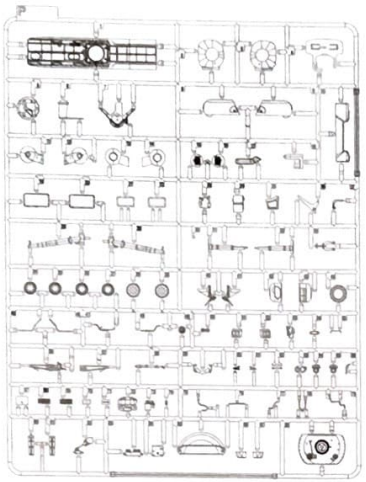

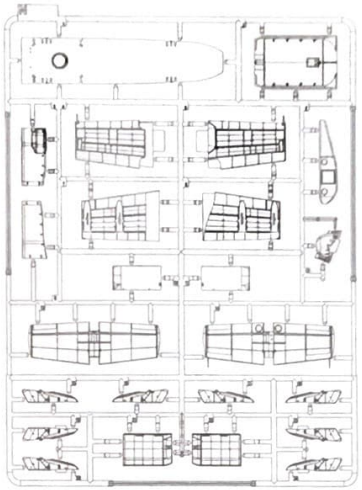

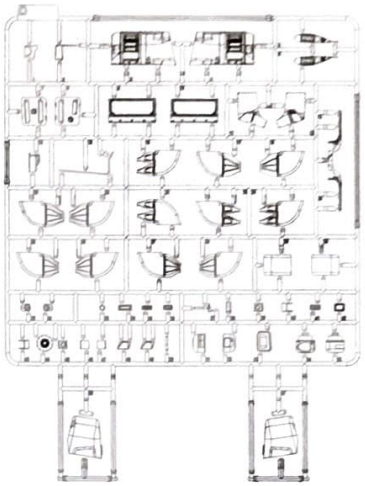

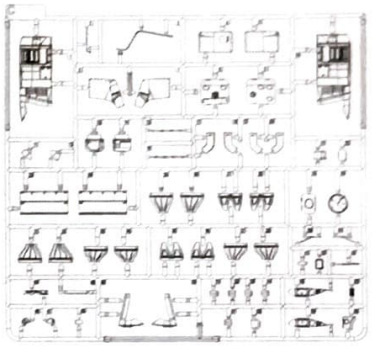

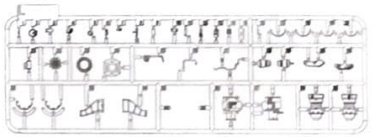

X2

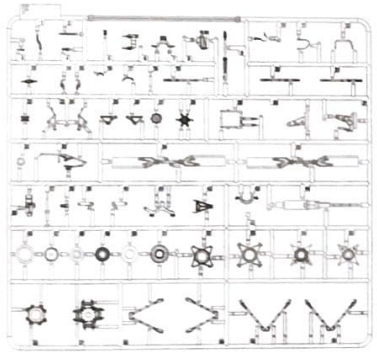

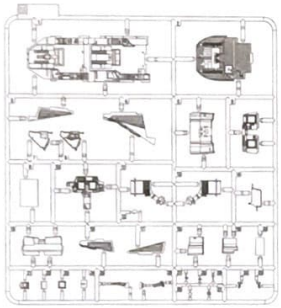

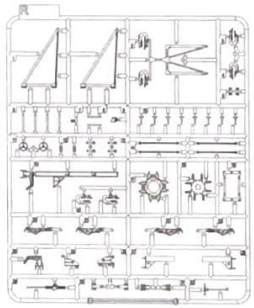

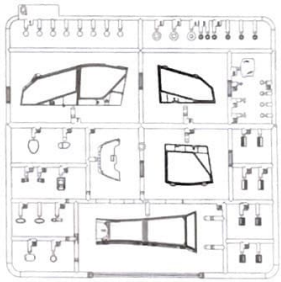

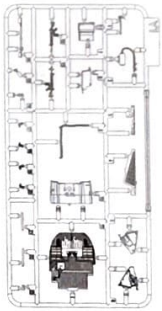

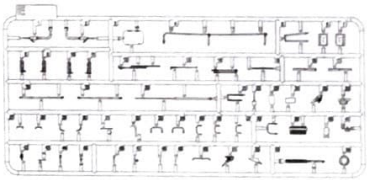

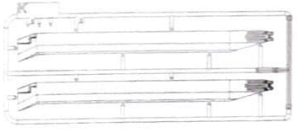

X2

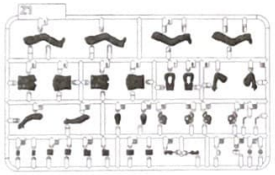

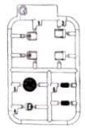

X2

Metal Cylinder
X8

Line

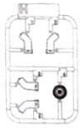

X2

Decal

S

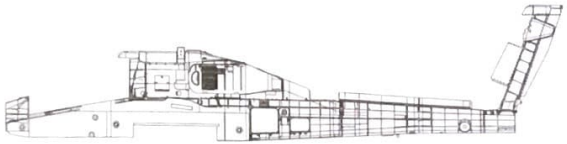

T

3D Part

TP

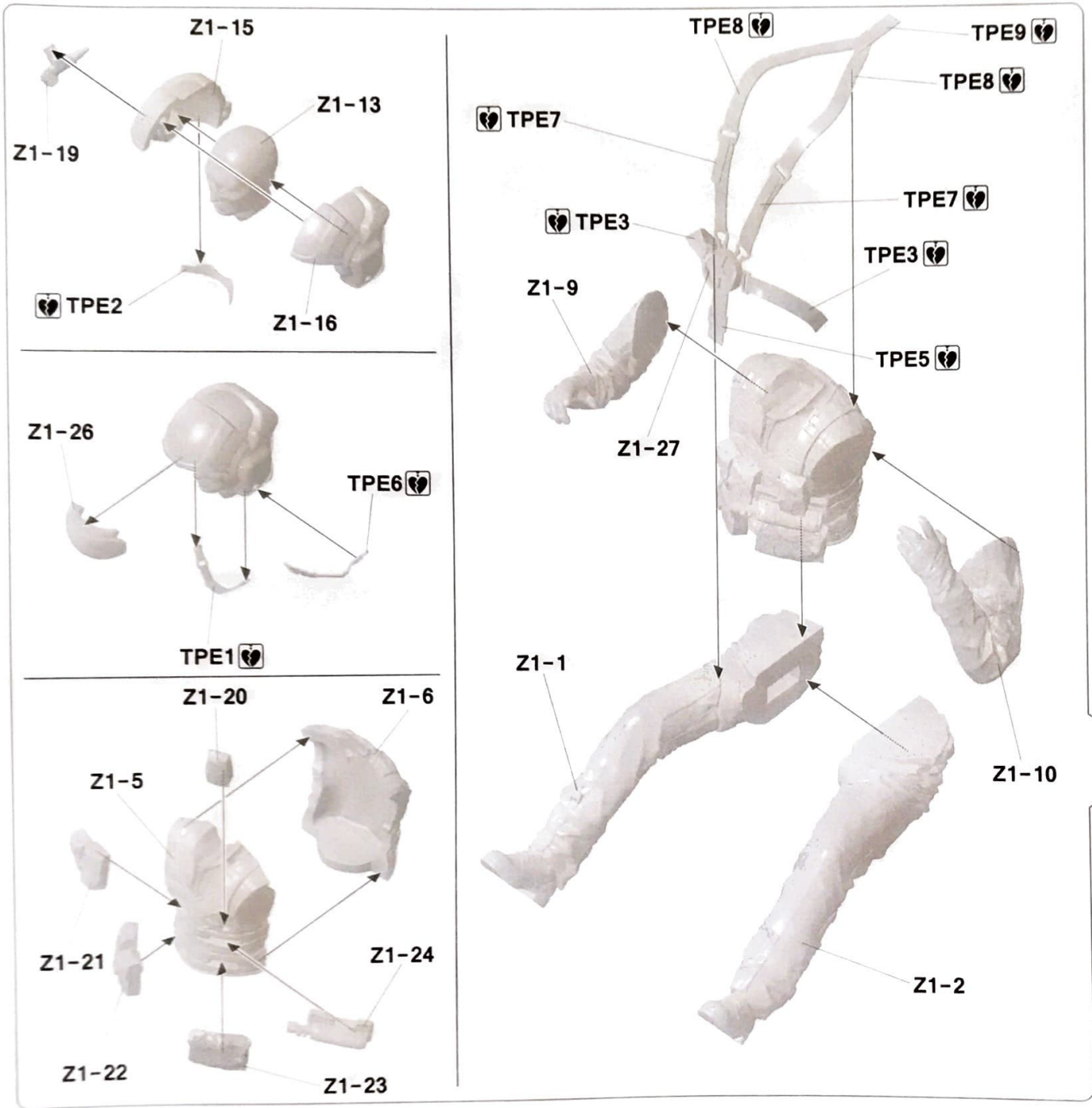
Z1-15
Z1-13
Z1-19
TPE2
Z1-16
Z1-26
TPE6
TPE1
Z1-20
Z1-6
Z1-5
Z1-21
Z1-24
Z1-22
Z1-23
TPE8
TPE9
TPE8
TPE7
TPE7
TPE3
TPE3
Z1-9
TPE5
Z1-27
Z1-1
Z1-10
Z1-2

Z1-7

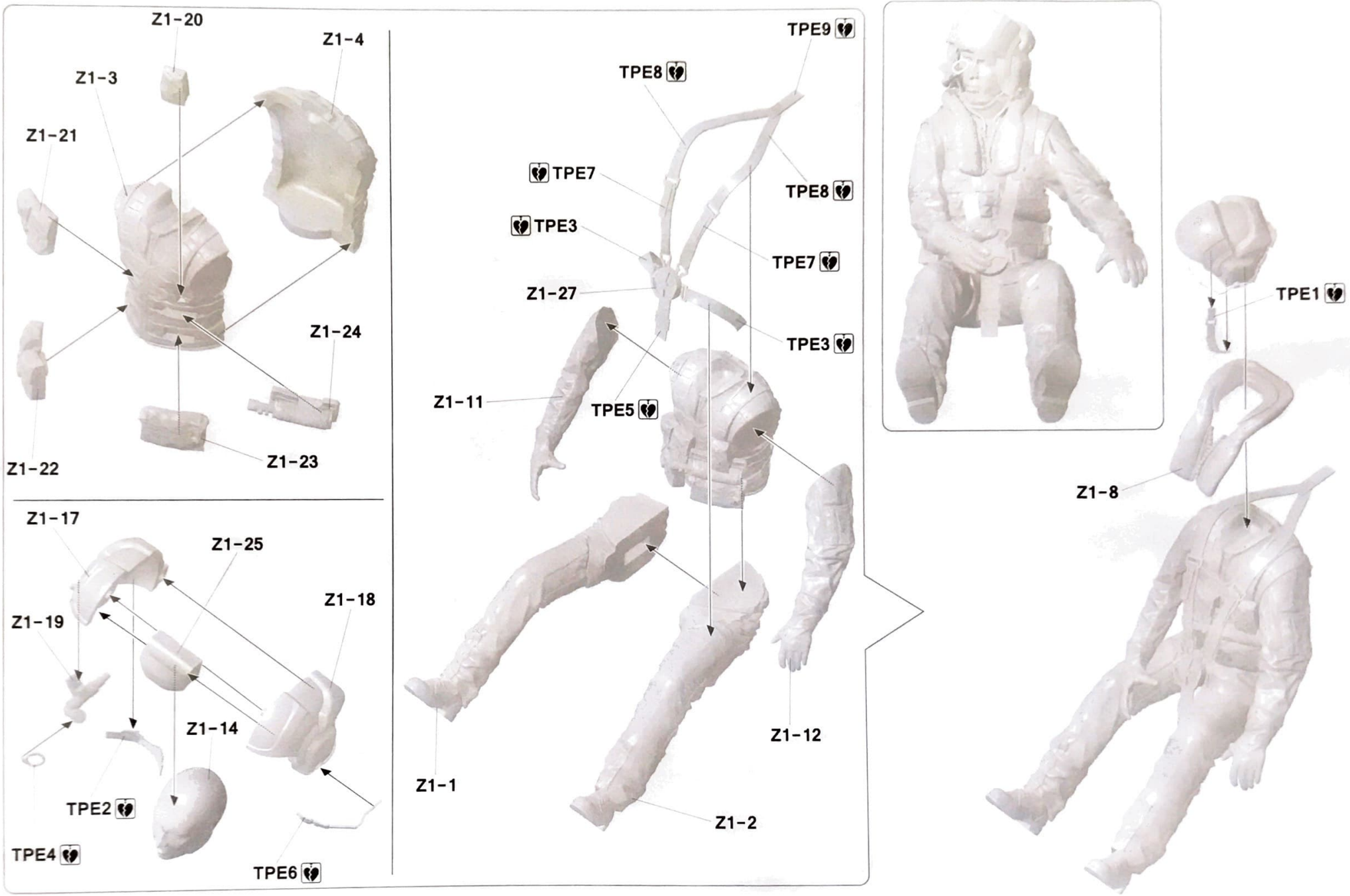
Z1-20
Z1-4
Z1-3
Z1-21
Z1-24
Z1-22
Z1-23
Z1-17
Z1-25
Z1-18
Z1-19
Z1-14
TPE2
TPE4
TPE6
TPE9
TPE8
TPE8
TPE7
TPE3
TPE7
Z1-27
TPE3
Z1-11
TPE5
Z1-12
Z1-1
Z1-2
TPE1
Z1-8

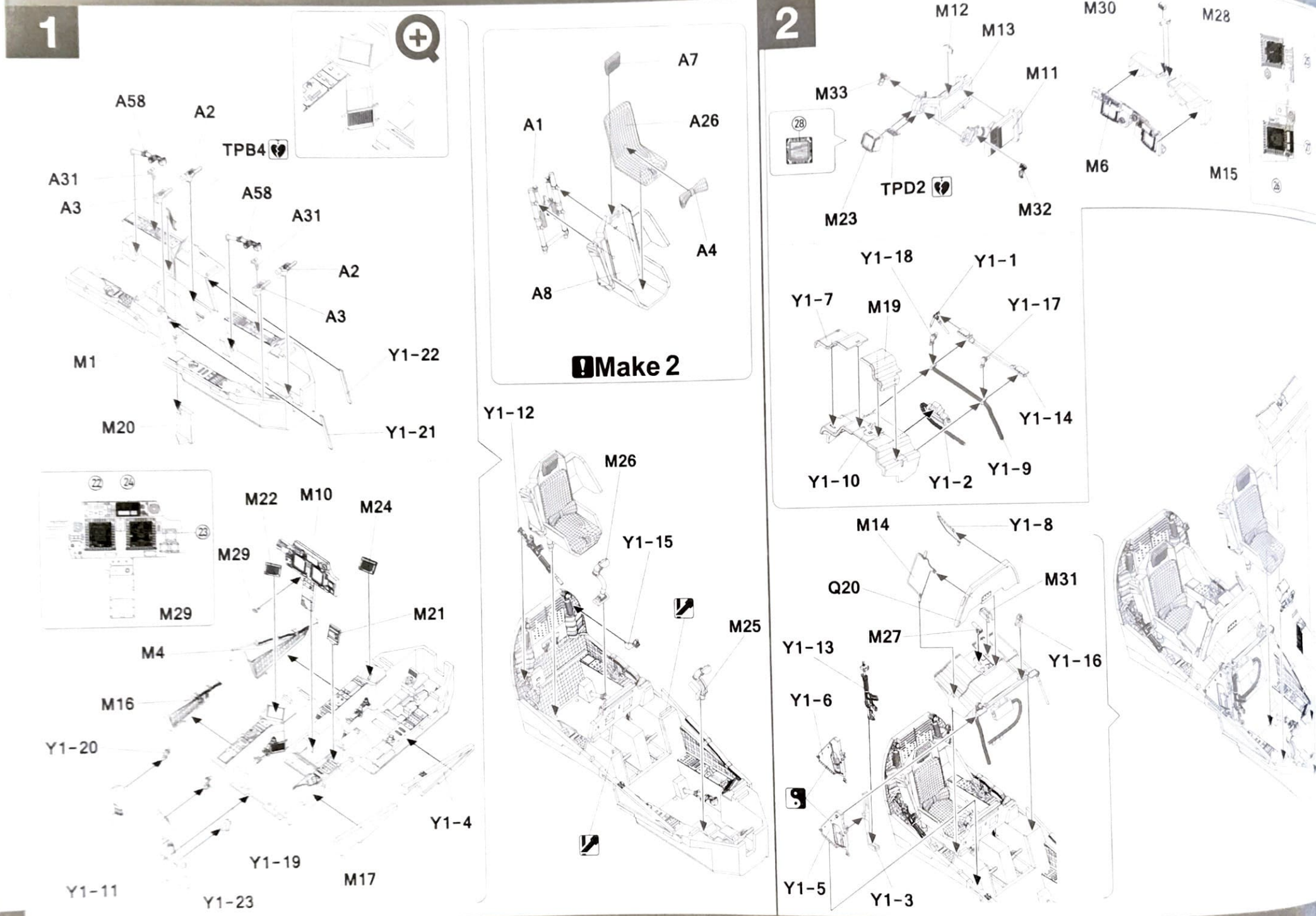
1
A58
A2
TPB4
A31
A3
A58
A31
A2
A3
M1
Y1-22
M20
Y1-21
22
24
23
M29
M22
M10
M24
M29
M21
M4
M16
Y1-20
Y1-4
Y1-19
M17
Y1-11
Y1-23
A7
A1
A26
A4
A8
Make 2
Y1-12
M26
Y1-15
M25
2
M12
M13
M11
M33
28
TPD2
M23
M32
M30
M28
M6
M15
Y1-18
Y1-1
Y1-7
M19
Y1-17
Y1-14
Y1-10
Y1-2
Y1-9
M14
Y1-8
Q20
M31
M27
Y1-16
Y1-13
Y1-6
Y1-5
Y1-3

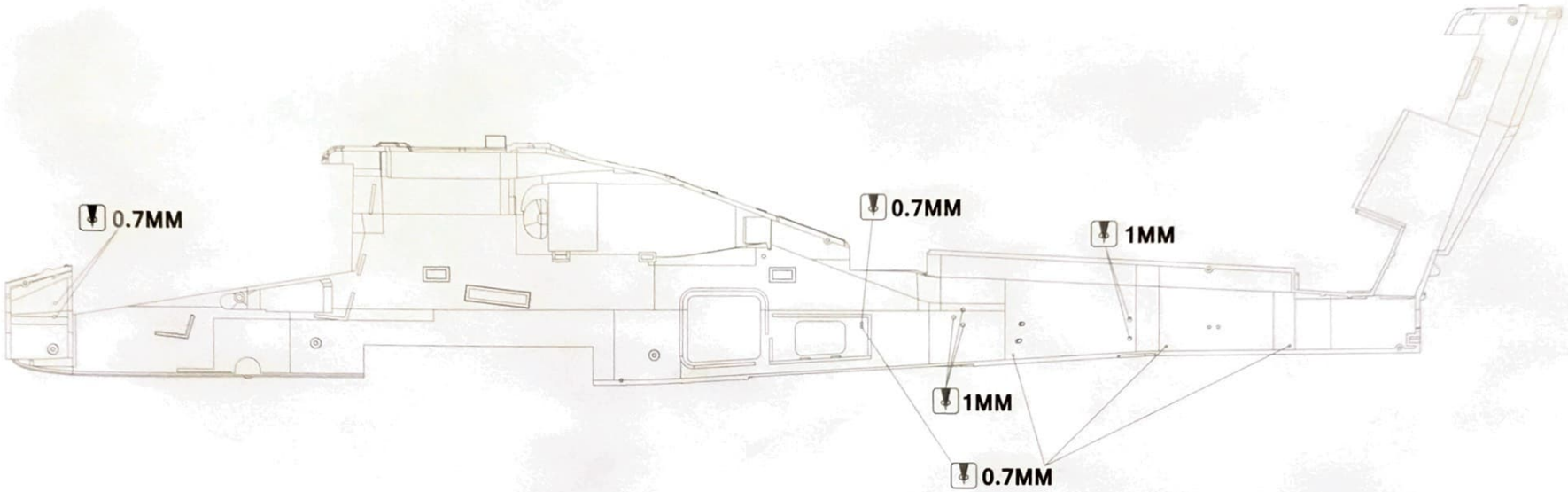
0.7MM
0.7MM
1MM
1MM
0.7MM

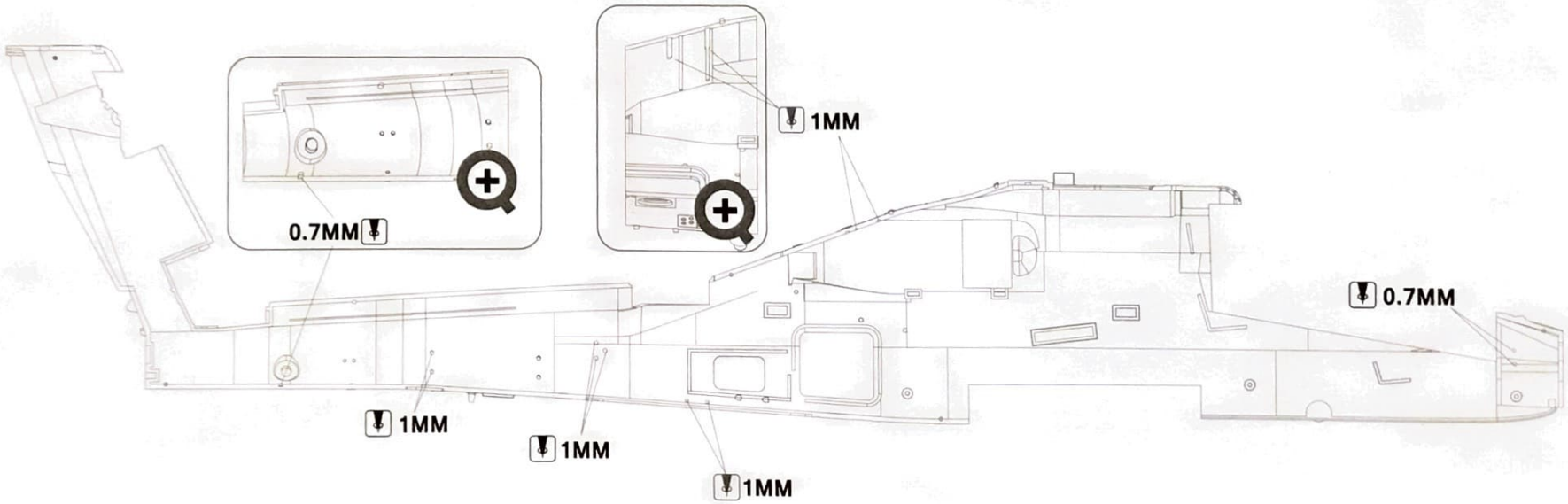
0.7MM
1MM
1MM
1MM
1MM
0.7MM

4

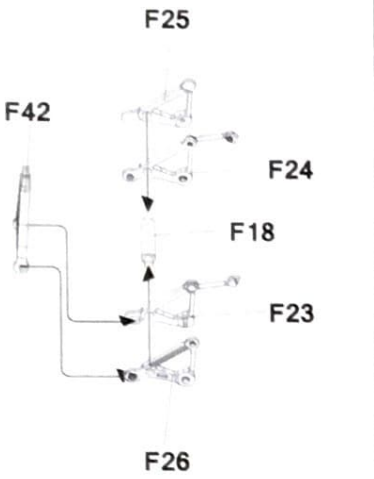
F25
F42
F24
F18
F23
F26

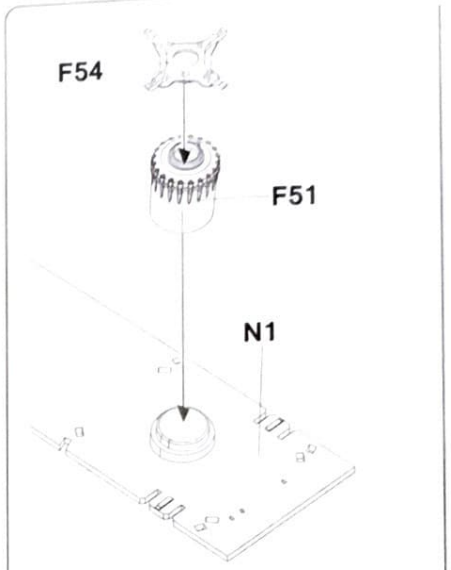
F54
F51
N1

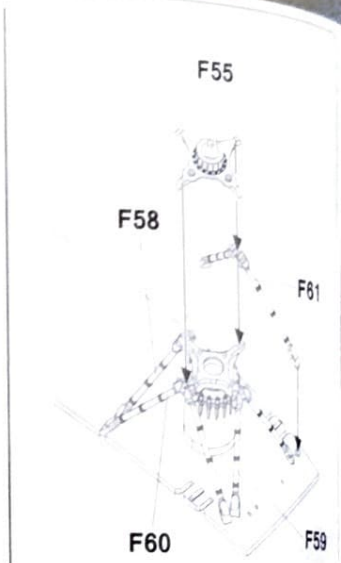
F55
F58
F61
F60
F59

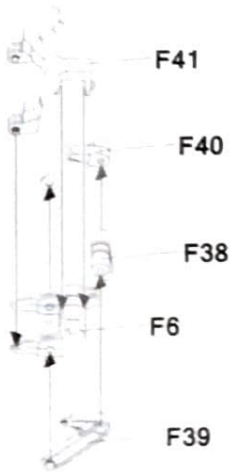
F41
F40
F38
F6
F39

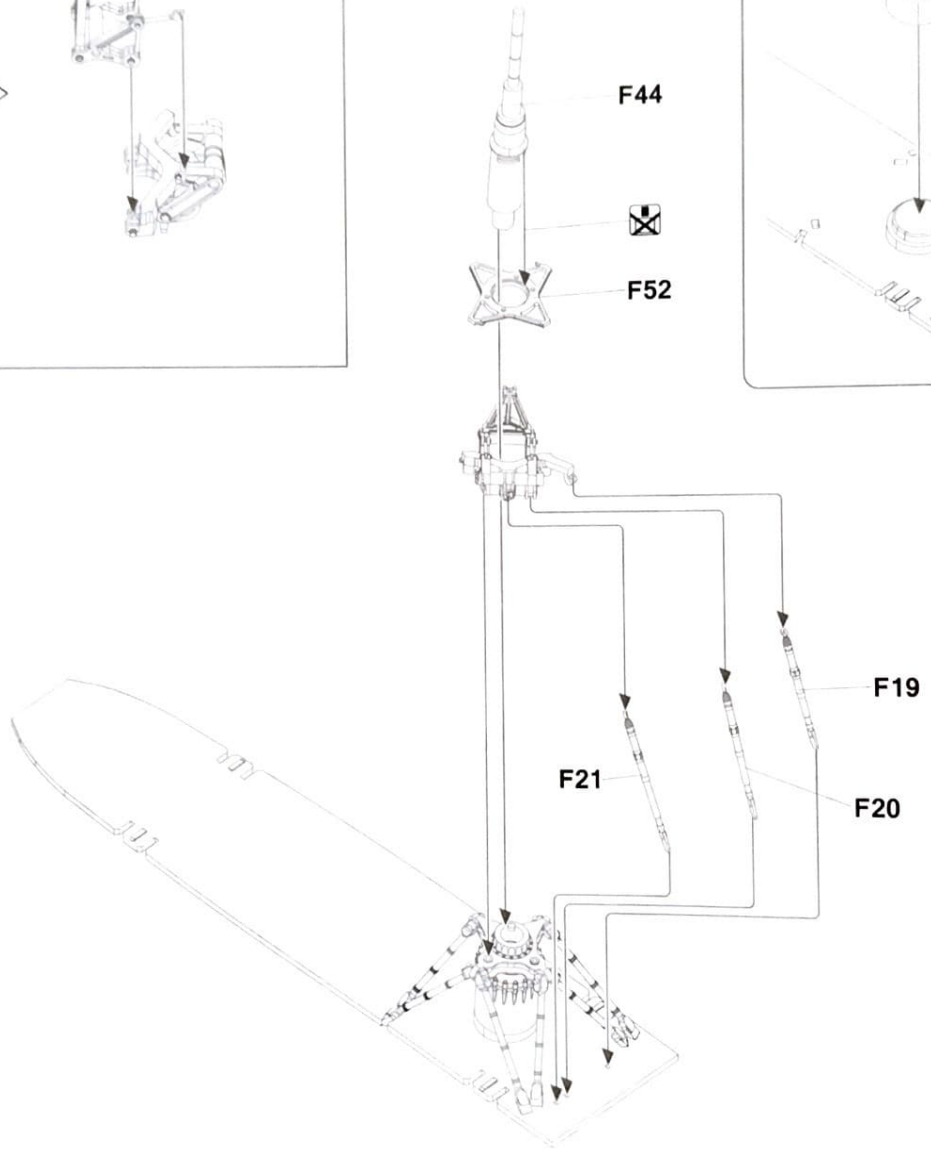
F44
F52
F19
F21
F20

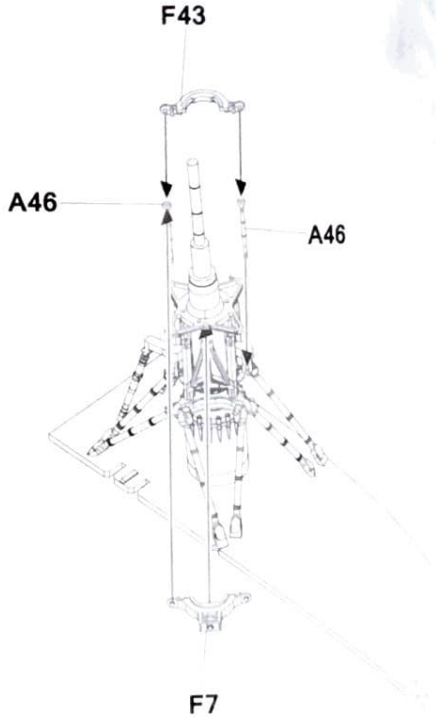
F43
A46
A46
F7

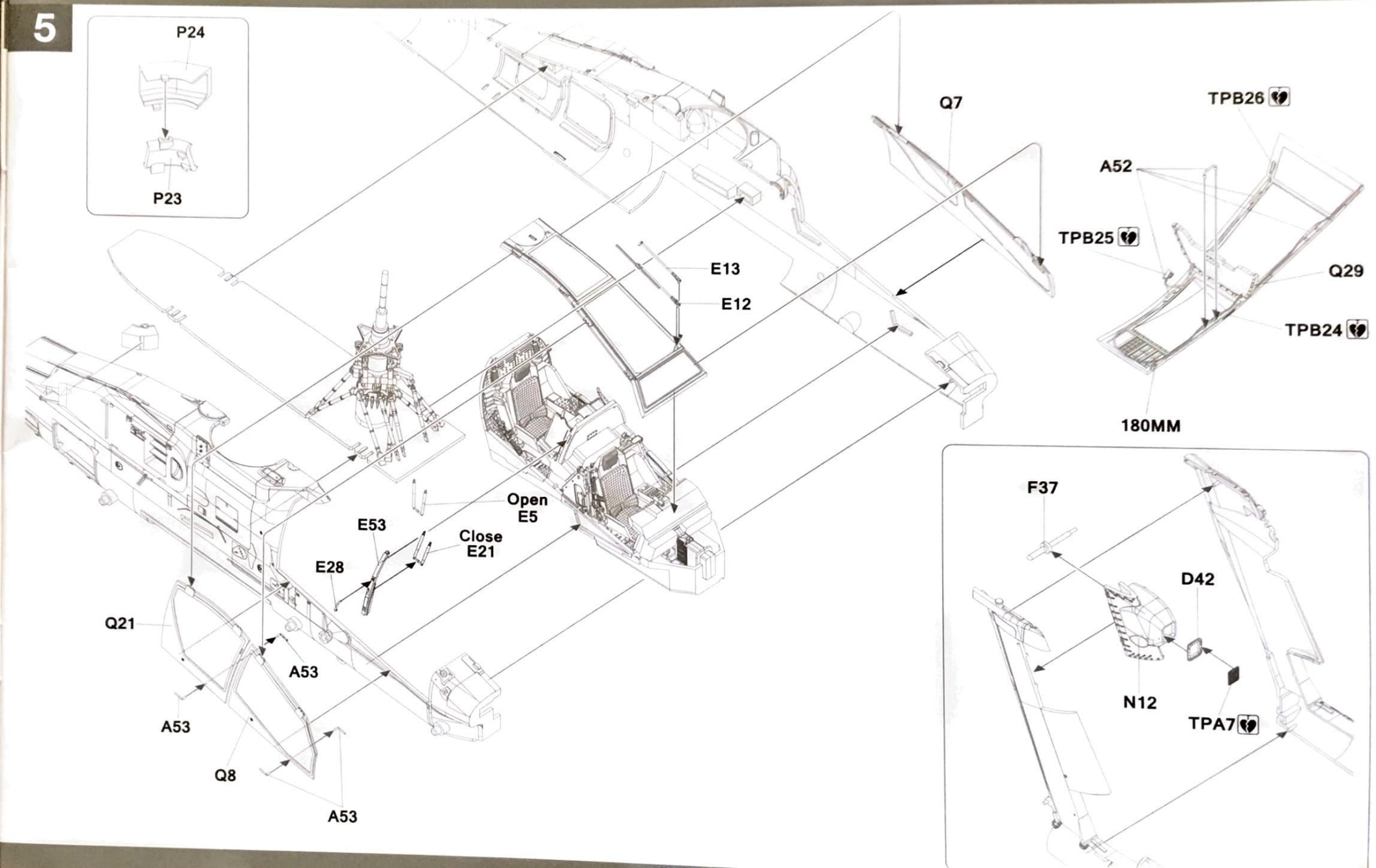
P24
P23
Q7
TPB26
A52
TPB25
Q29
TPB24
180MM
E13
E12
Open
E5
E53
Close
E21
E28
Q21
A53
A53
Q8
A53
F37
D42
N12
TPA7

6

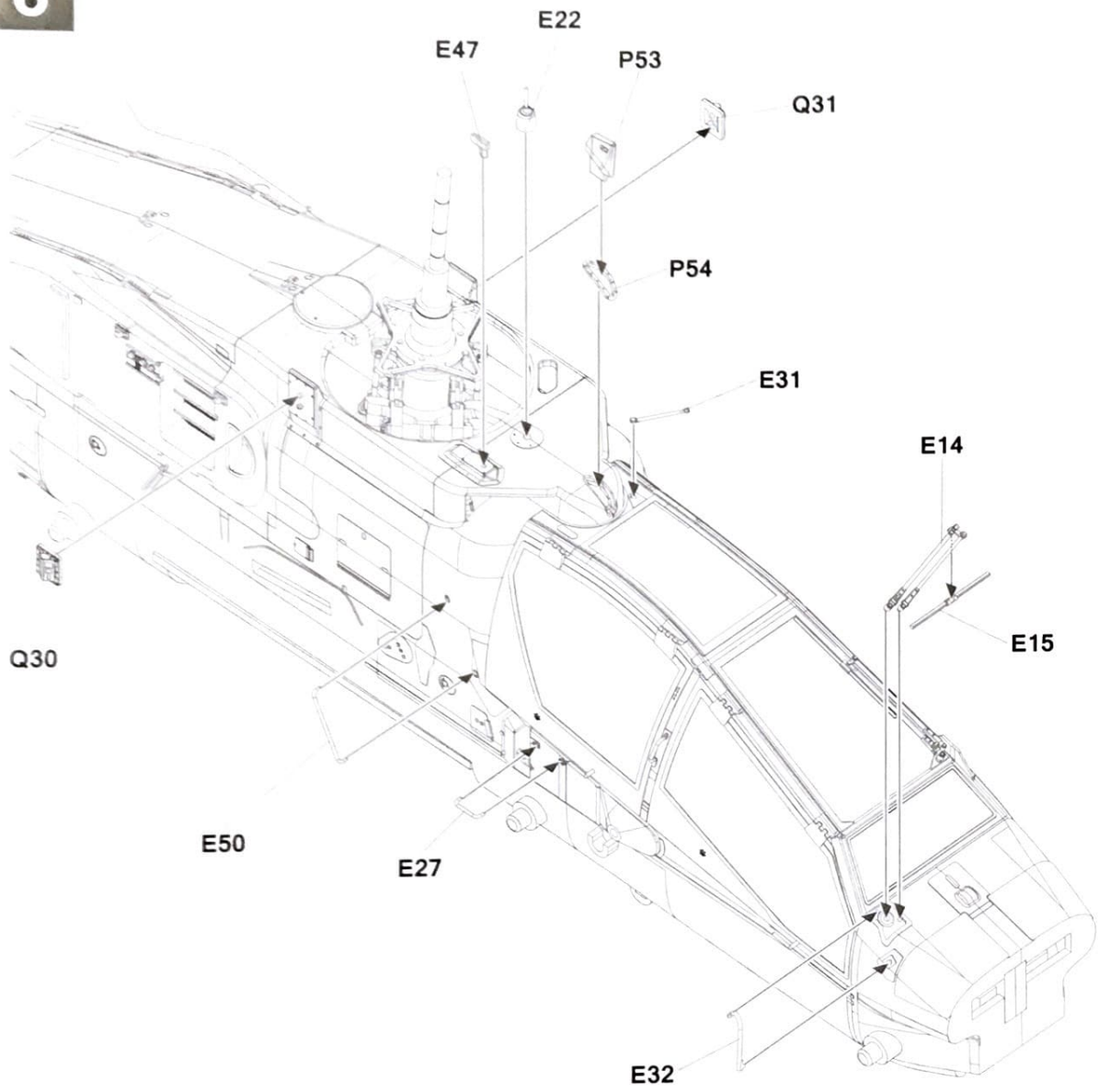
E22
E47
P53
Q31
P54
E31
E14
E15
Q30
E50
E27
E32

7

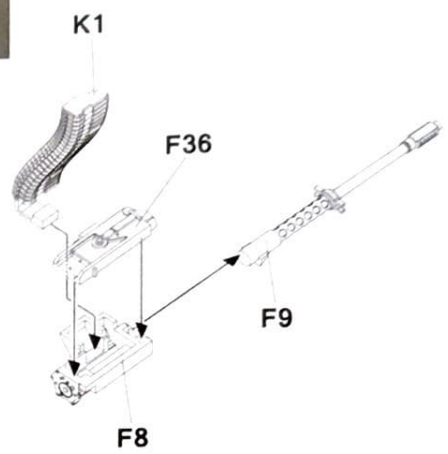
K1
F36
F9
F8

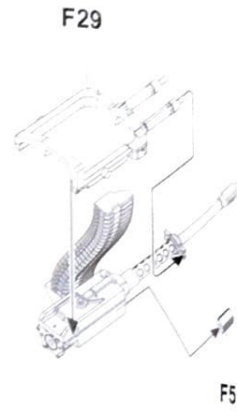
F29
F5

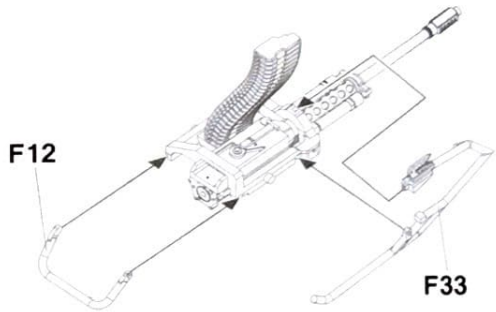
F12
F33

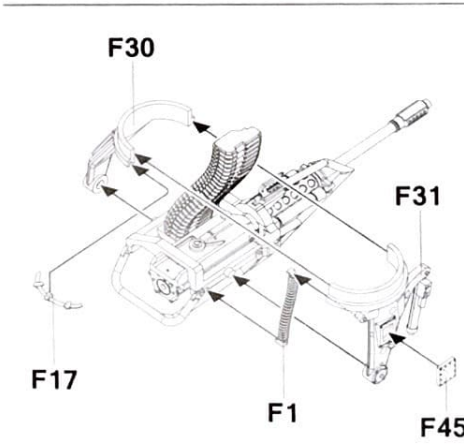
F30
F31
F17
F1
F45

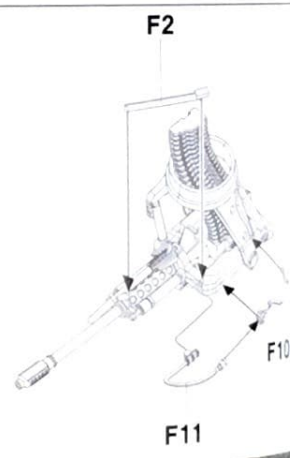
F2
F10
F11

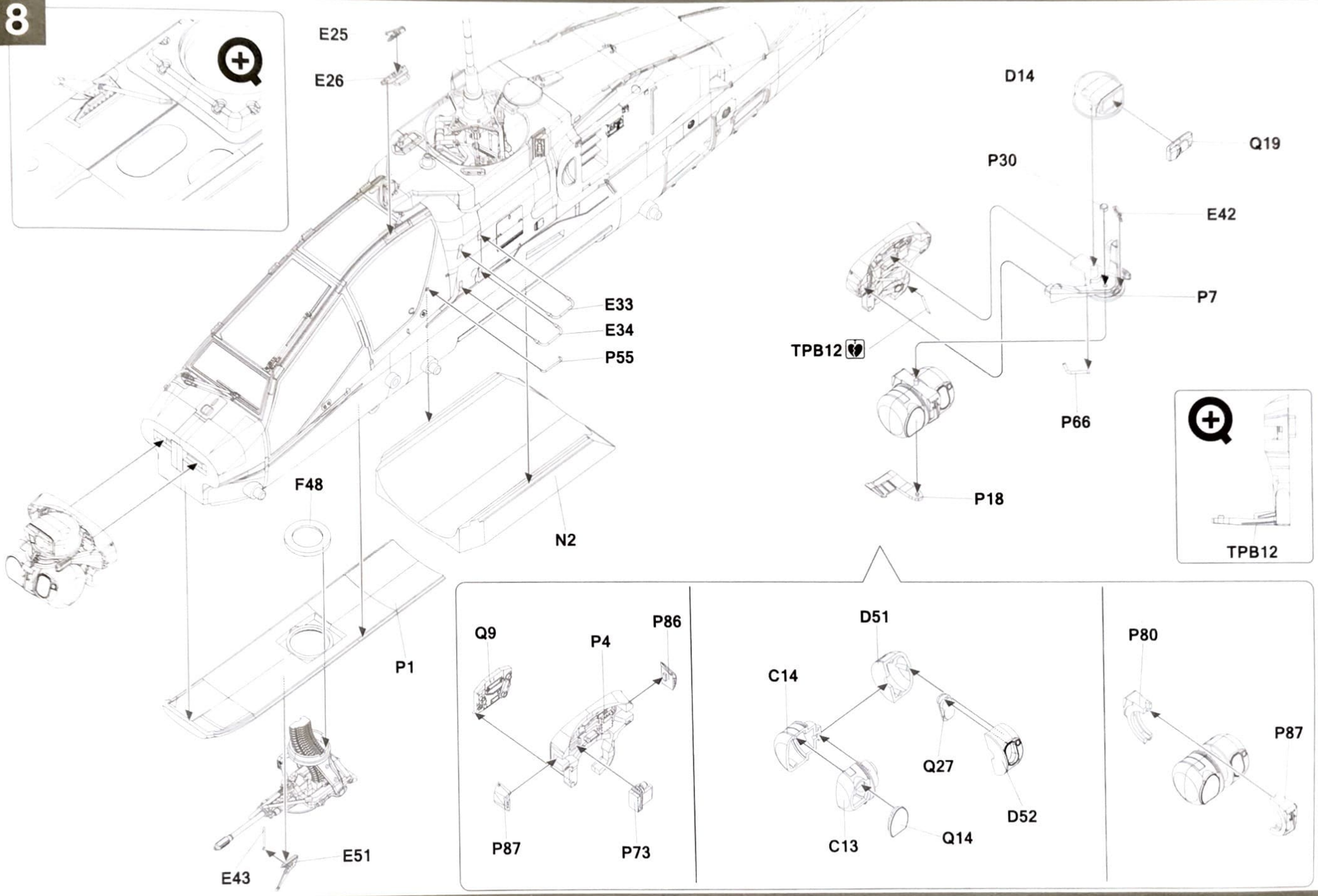
E25
E26
E33
E34
P55
N2
F48
P1
E43
E51
D14
Q19
P30
E42
P7
TPB12
P66
P18
TPB12
Q9
P4
P86
P87
P73
D51
C14
Q27
D52
C13
Q14
P80
P87

9

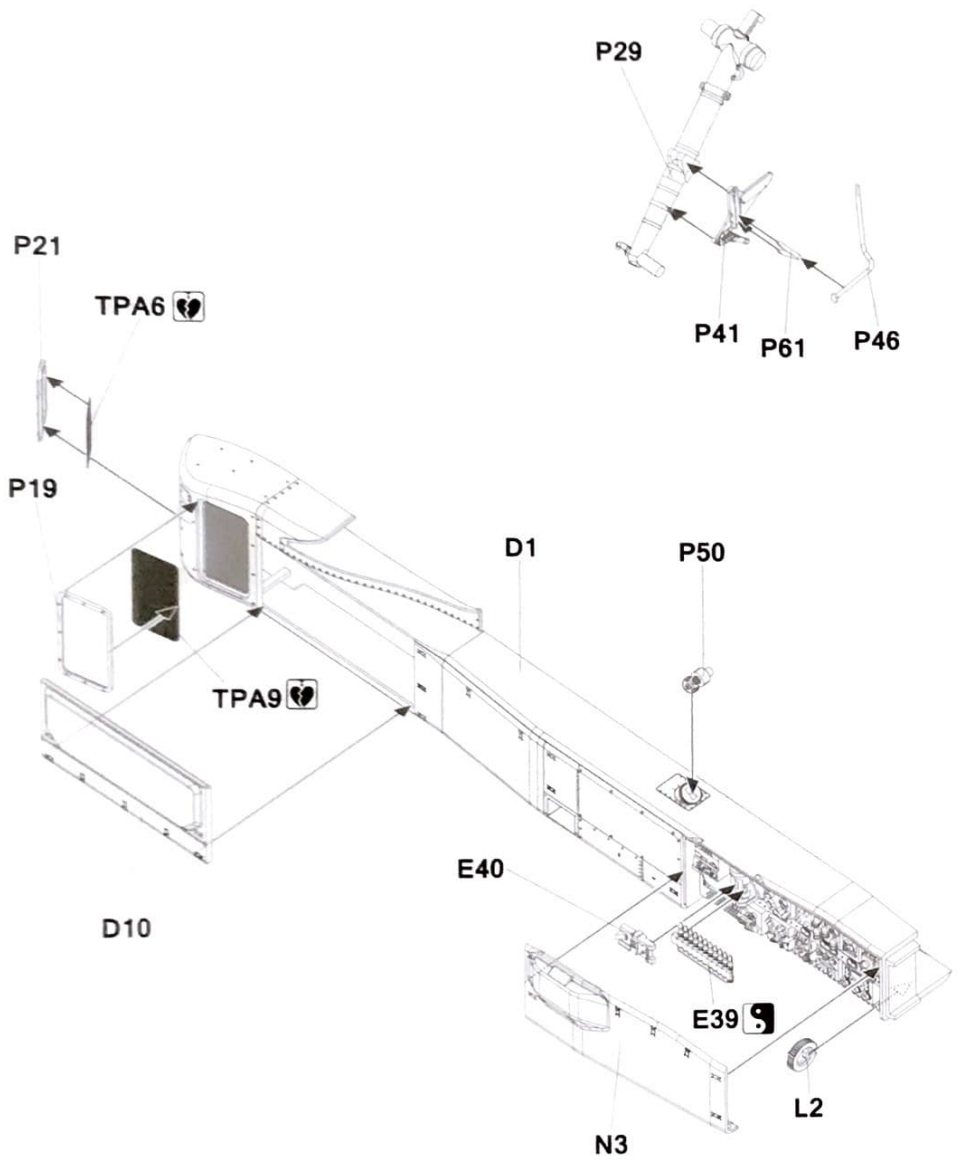
P29
P41
P61
P46
P21
TPA6
P19
D1
P50
TPA9
E40
D10
E39
L2
N3

10

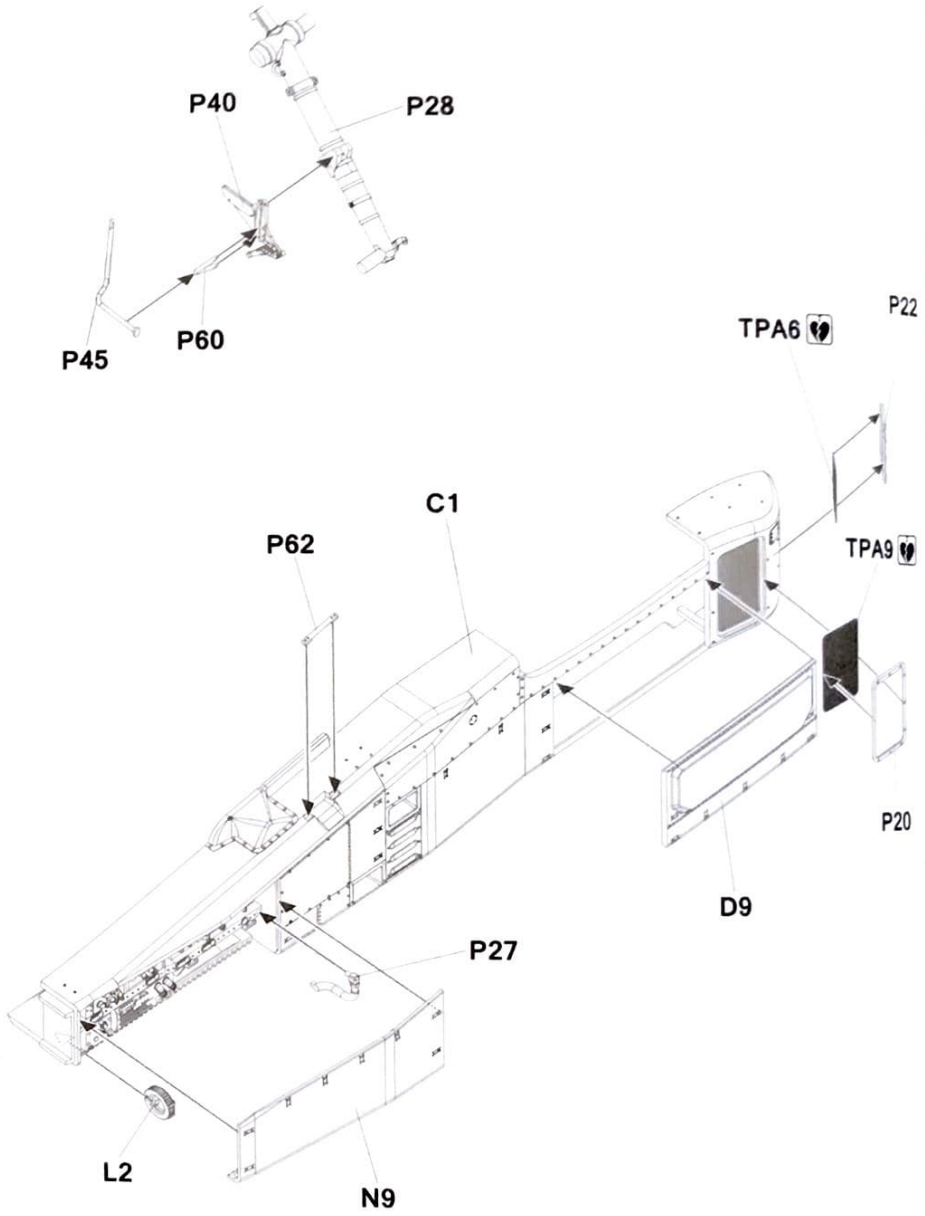
P40
P28
P45
P60
P22
TPA6
C1
P62
TPA9
P20
D9
P27
L2
N9

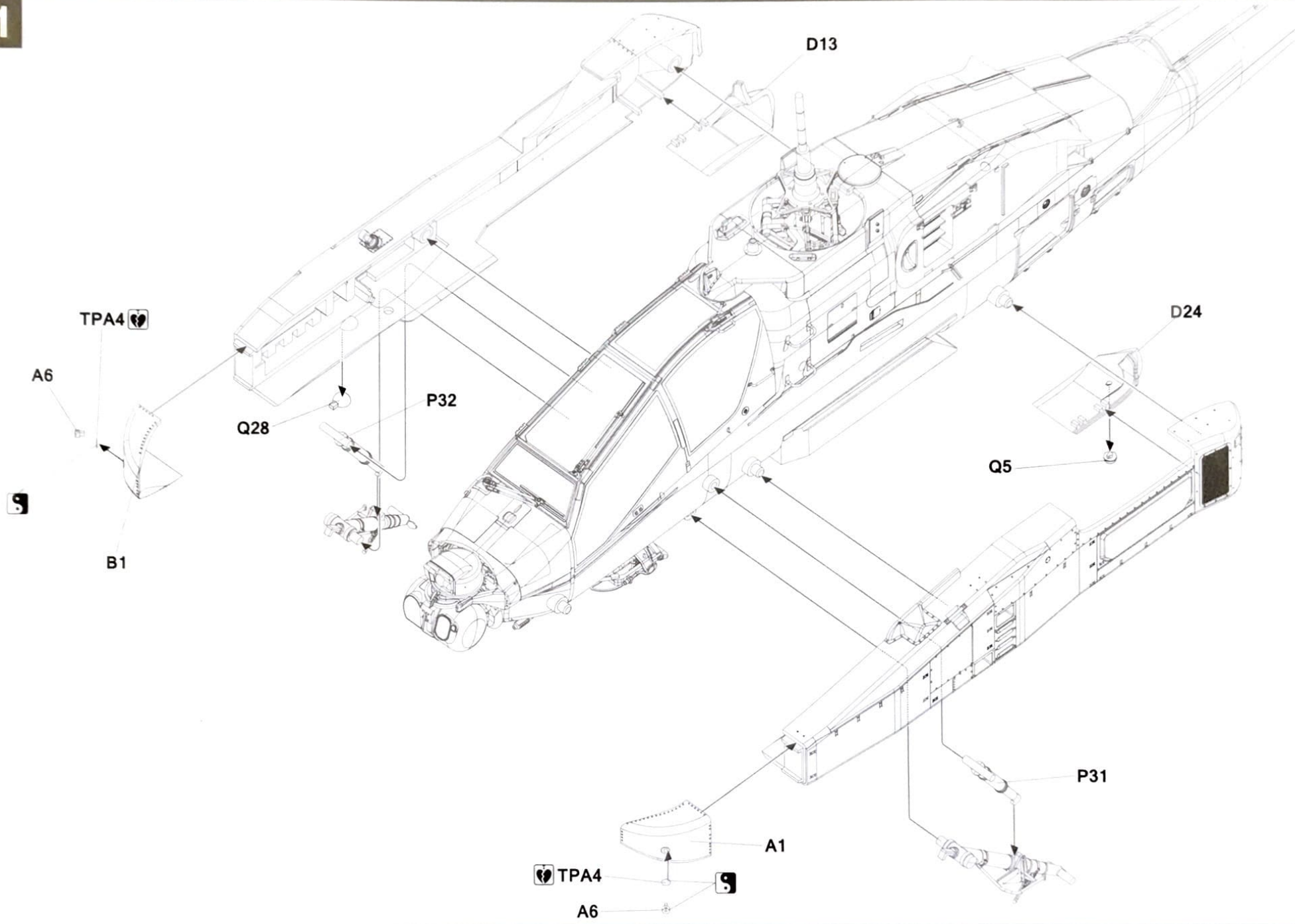
D13
TPA4
A6
B1
Q28
P32
D24
Q5
P31
A1
TPA4
A6

12

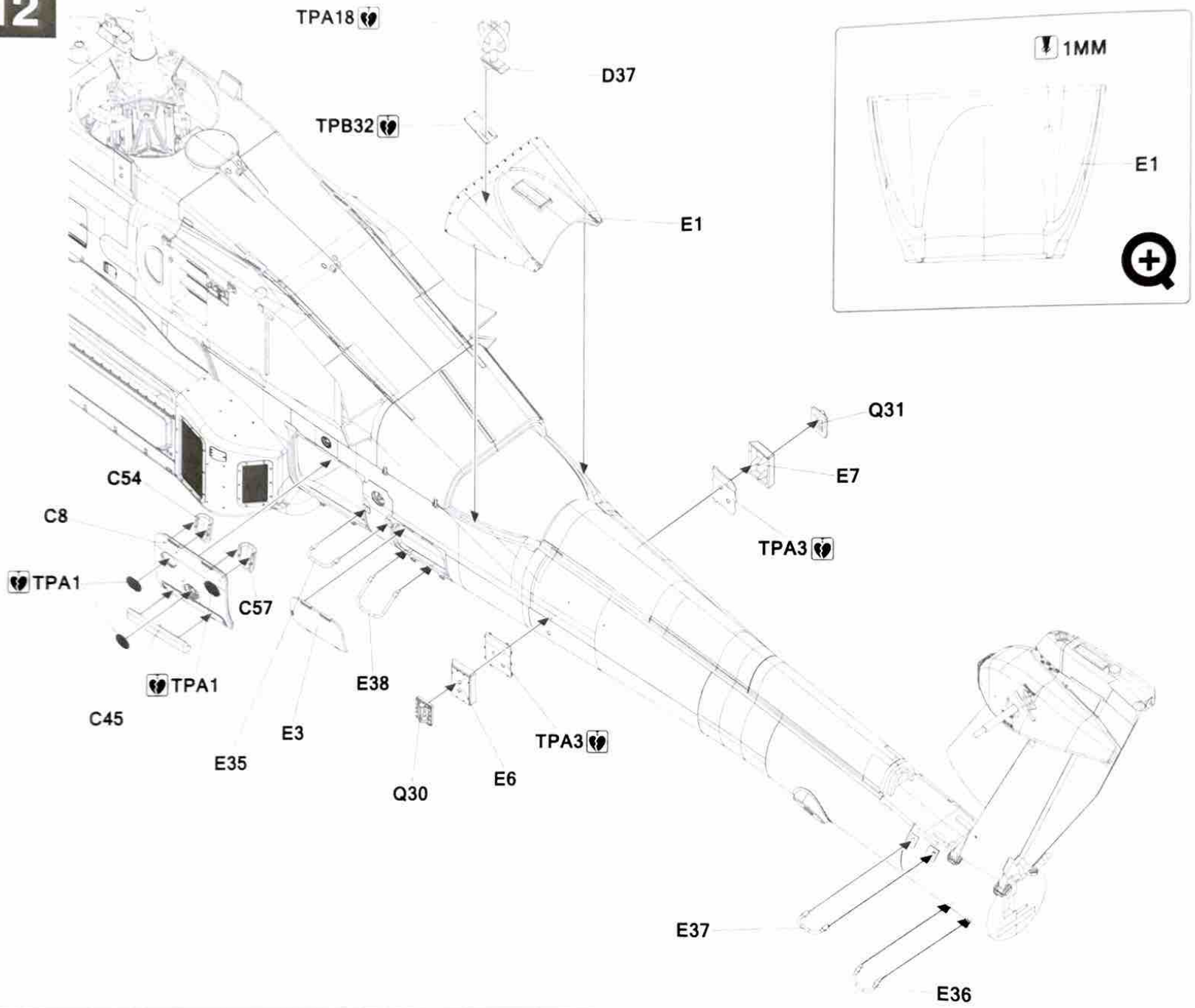
TPA18
D37
TPB32
E1
1MM
E1
Q31
E7
TPA3
C54
C8
TPA1
C57
TPA1
C45
E3
E35
E38
Q30
E6
TPA3
E37
E36

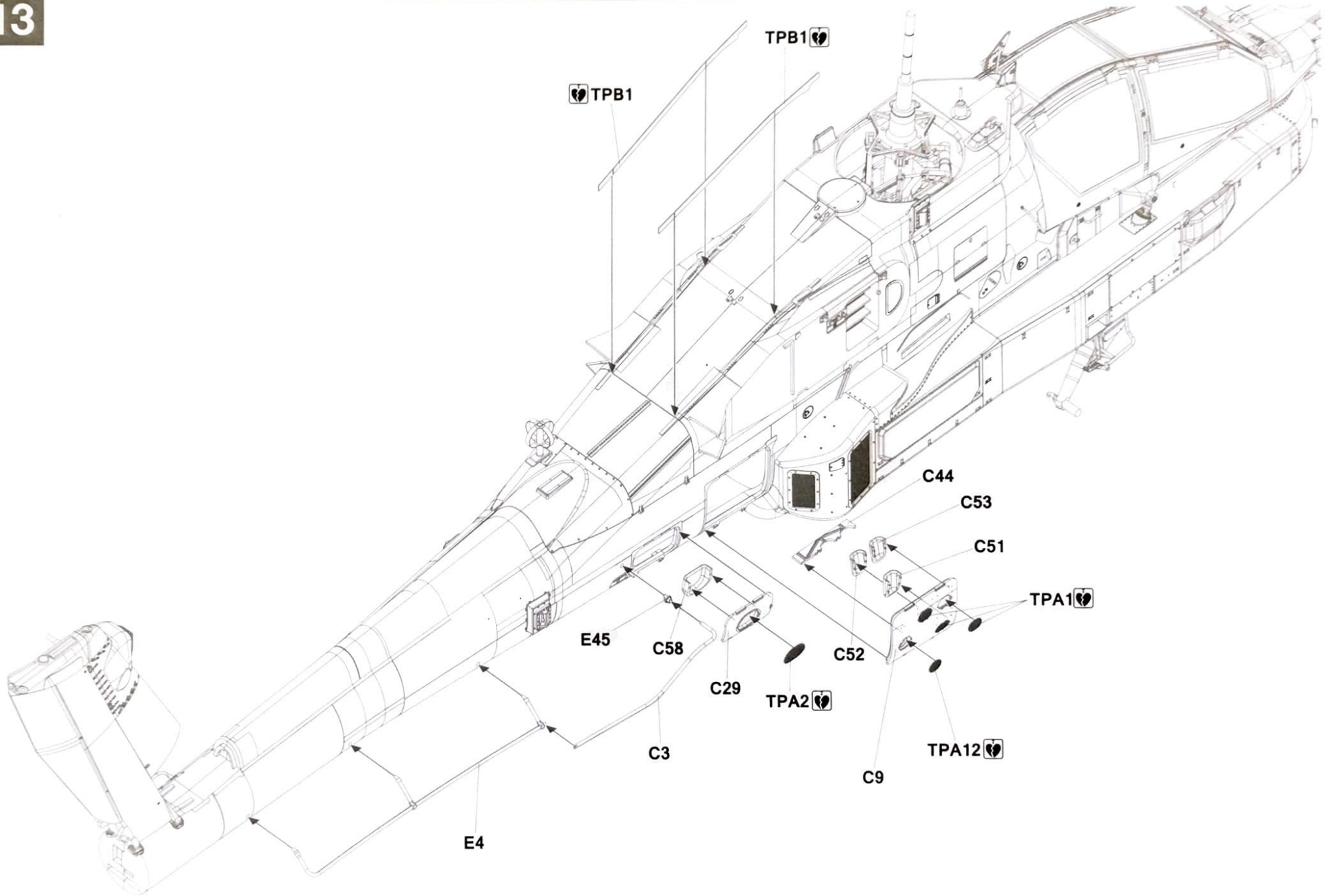
TPB1
TPB1
C44
C53
C51
TPA1
E45
C58
C52
C29
TPA2
C3
C9
TPA12
E4

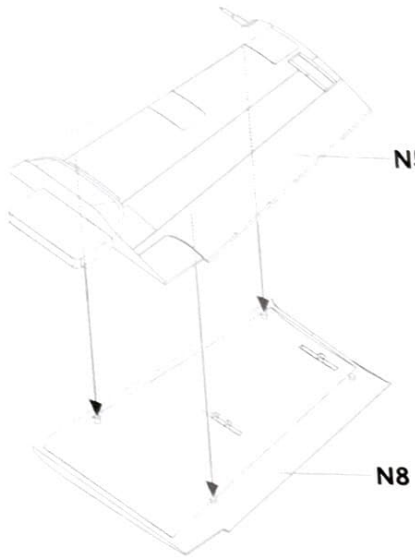
N5
N8

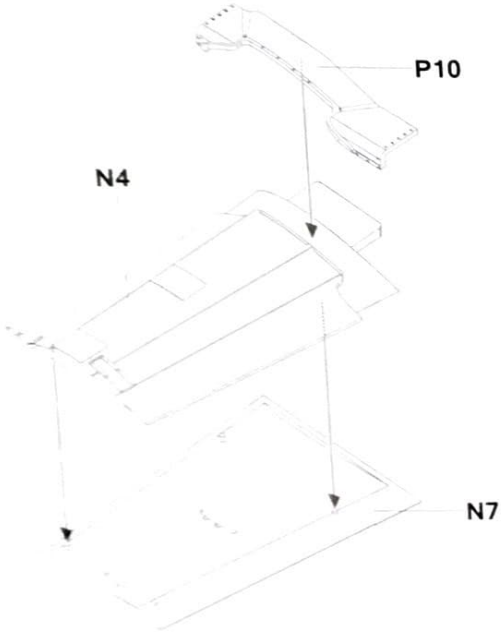
P10
N4
N7

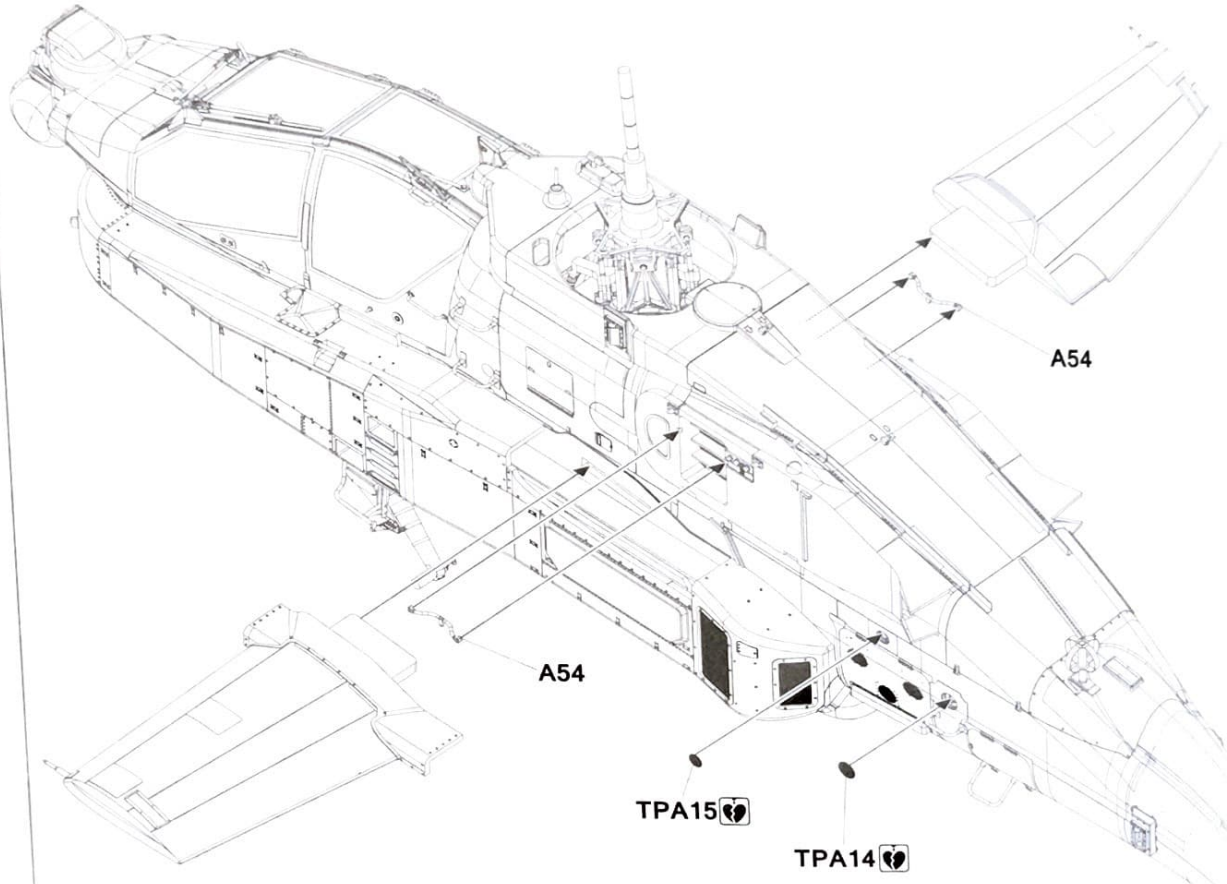
A54
A54
TPA15
TPA14

15

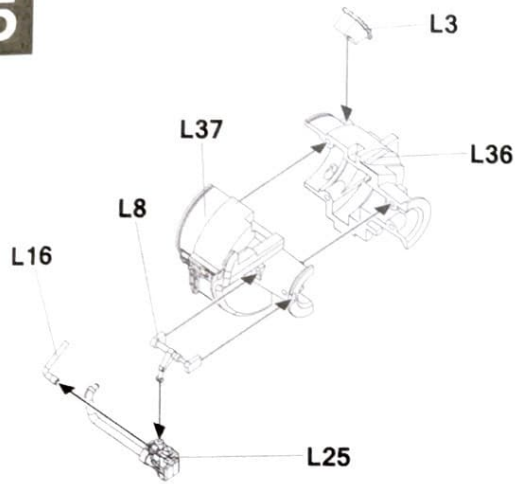
L3
L37
L36
L8
L16
L25

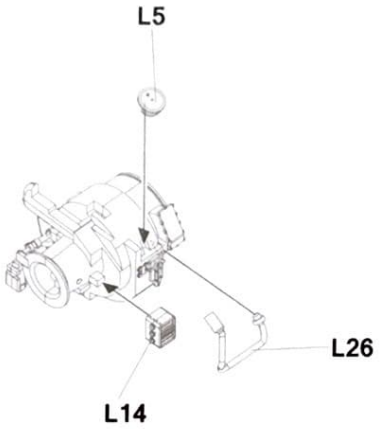
L5
L26
L14

L29
L28

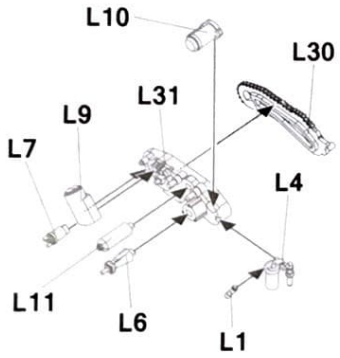
L10
L30
L31
L9
L7
L4
L11
L6
L1

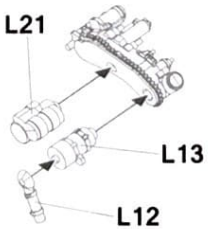
L21
L13
L12

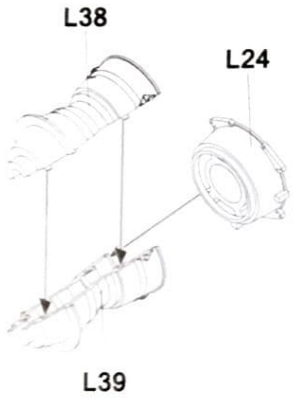
L38
L24
L39

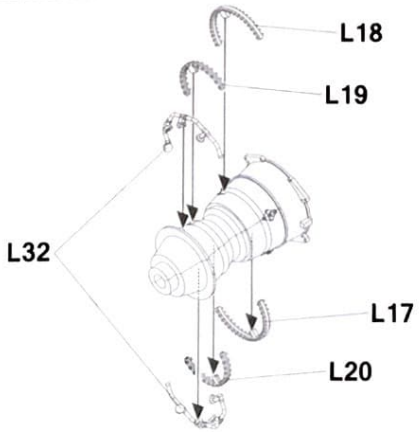
L18
L19
L32
L17
L20

16

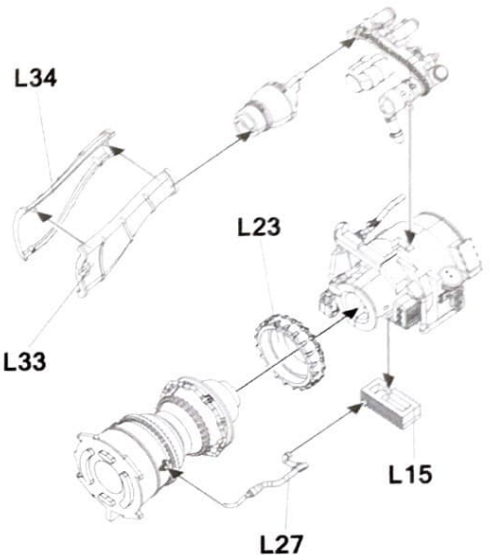
L34
L23
L33
L15
L27

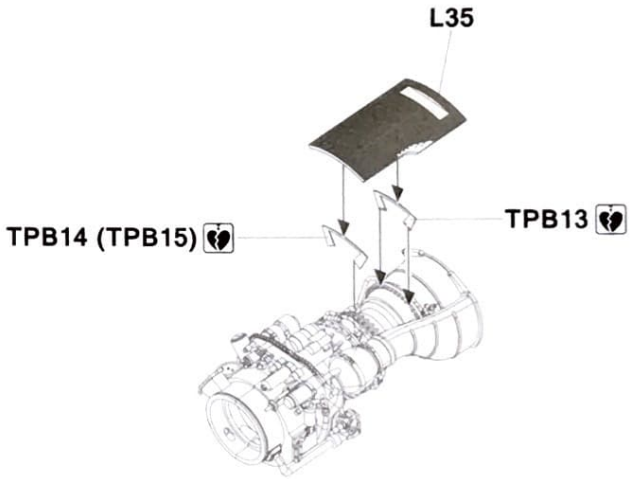
L35
TPB14 (TPB15)
TPB13

Make 2

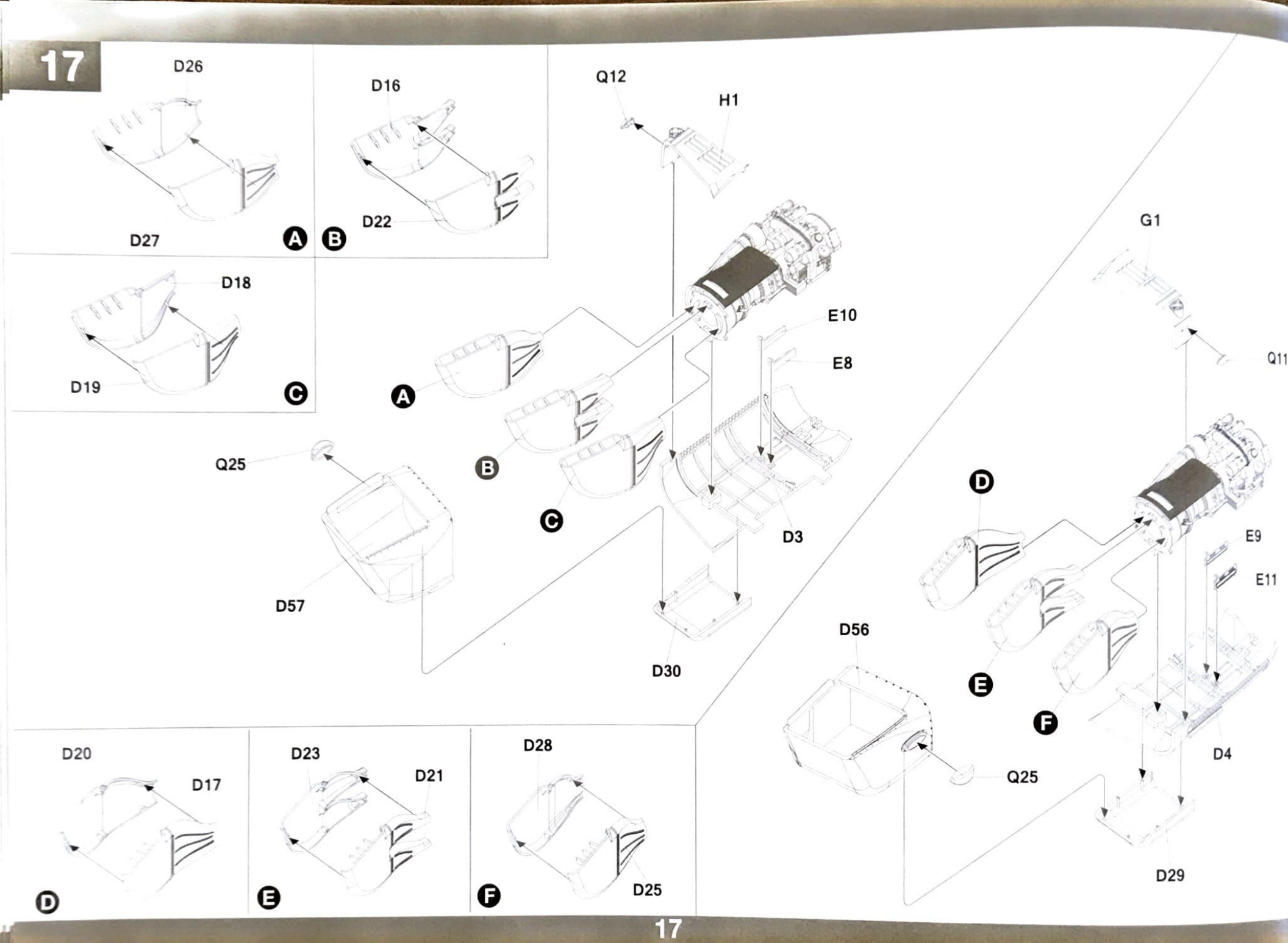
D26
D27
A
D16
D22
B
D18
D19
C
Q12
H1
E10
E8
A
B
C
Q25
D57
D3
D30
G1
Q11
D
E9
E11
D56
E
F
Q25
D4
D29
D20
D17
D
D23
D21
E
D28
D25
F

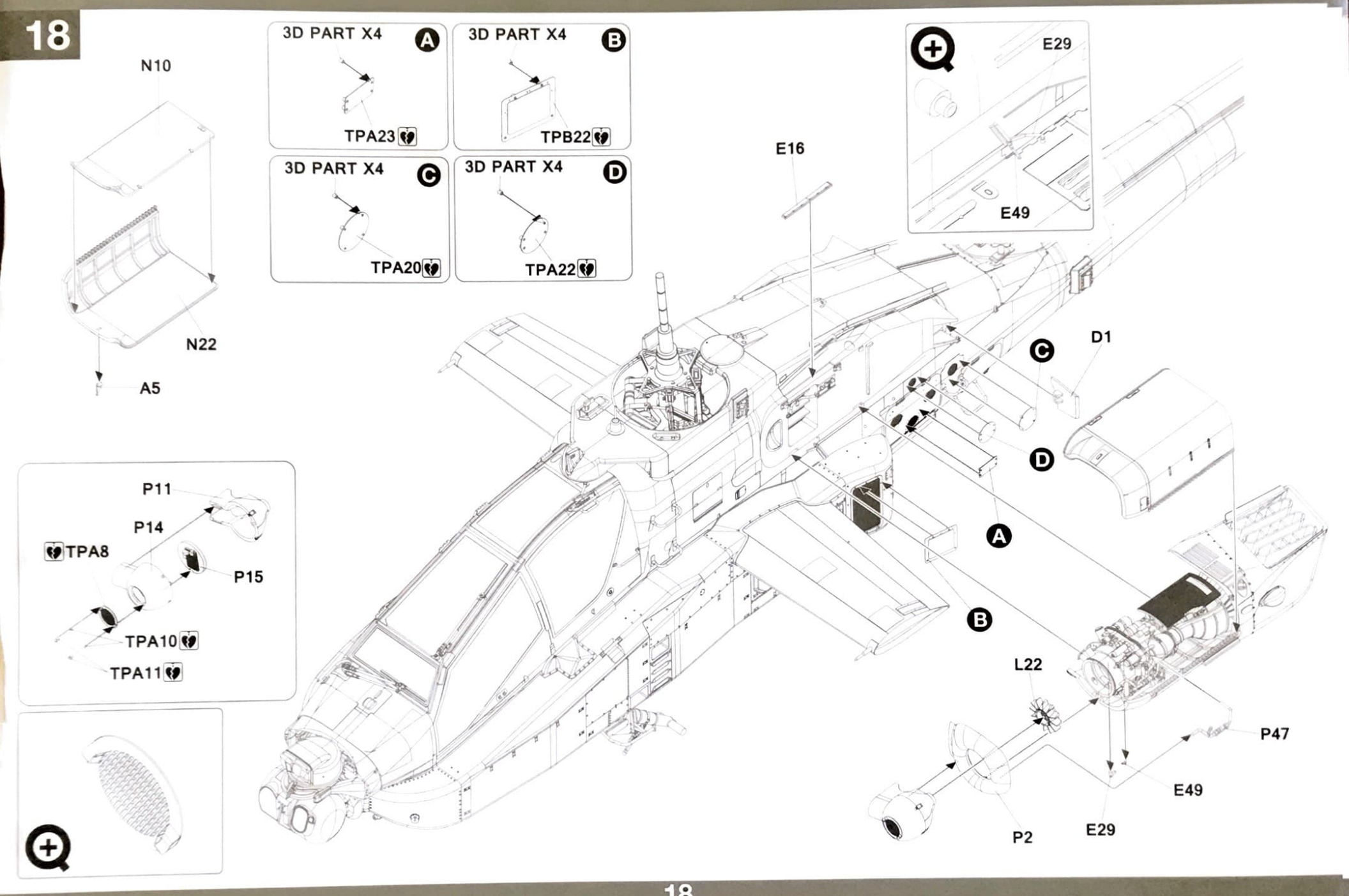
N10
N22
A5
3D PART X4
A
TPA23
3D PART X4
B
TPB22
3D PART X4
C
TPA20
3D PART X4
D
TPA22
E16
E29
E49
C
D1
D
A
B
P11
P14
TPA8
P15
TPA10
TPA11
L22
P47
E49
E29
P2

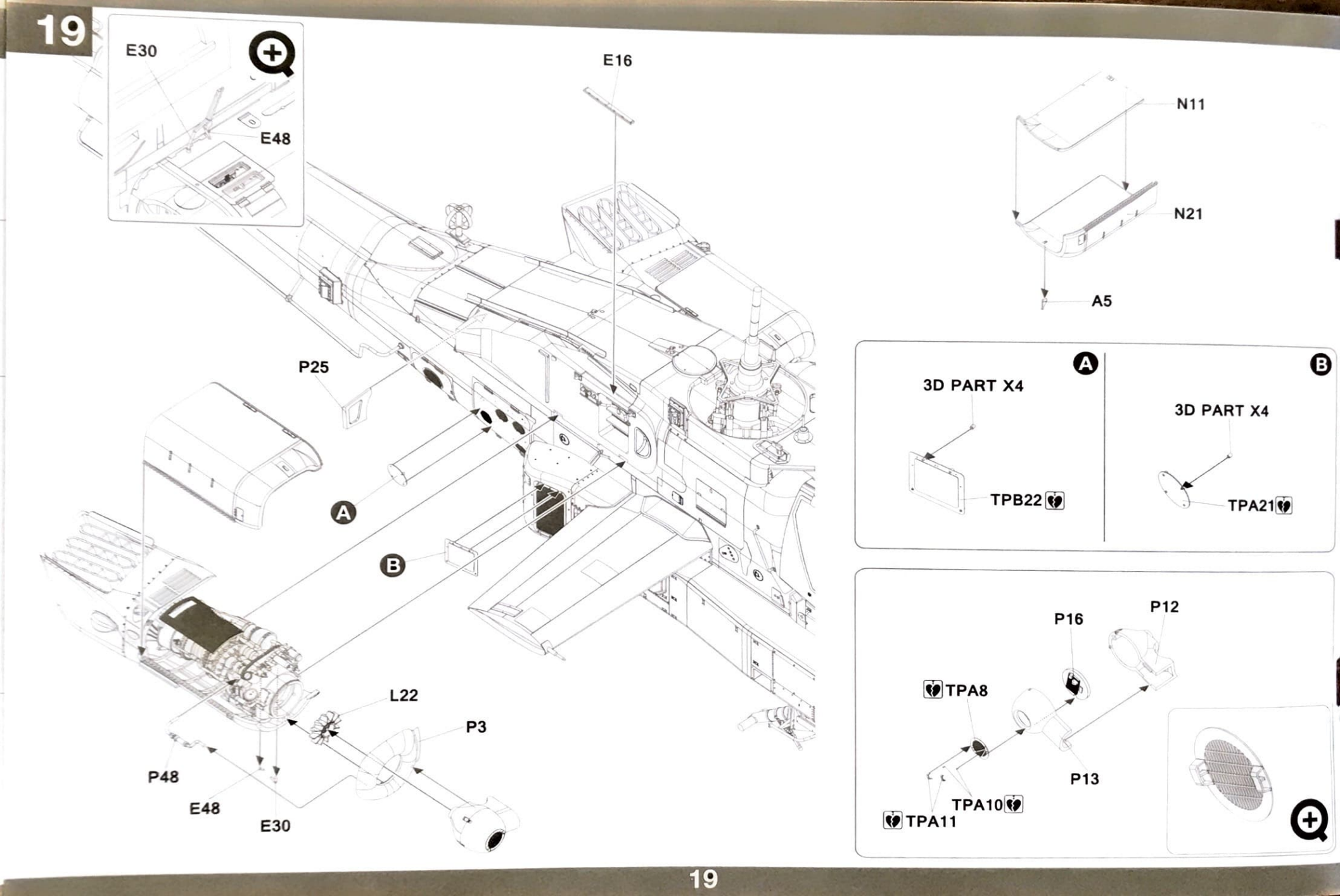
E30
E48
E16
P25
A
B
L22
P3
P48
E48
E30
N11
N21
A5
A
3D PART X4
TPB22
B
3D PART X4
TPA21
P16
P12
TPA8
P13
TPA10
TPA11

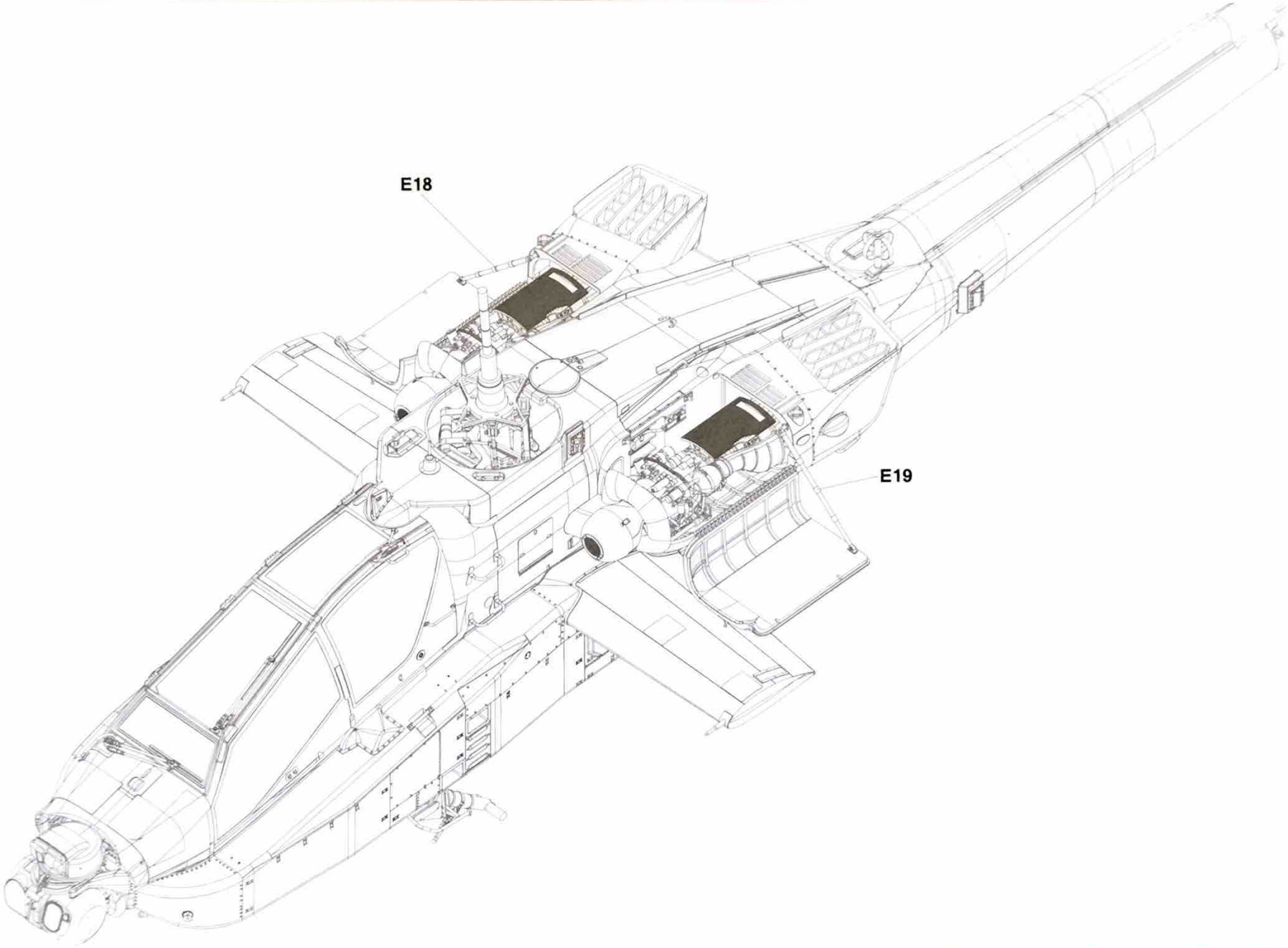
E18
E19

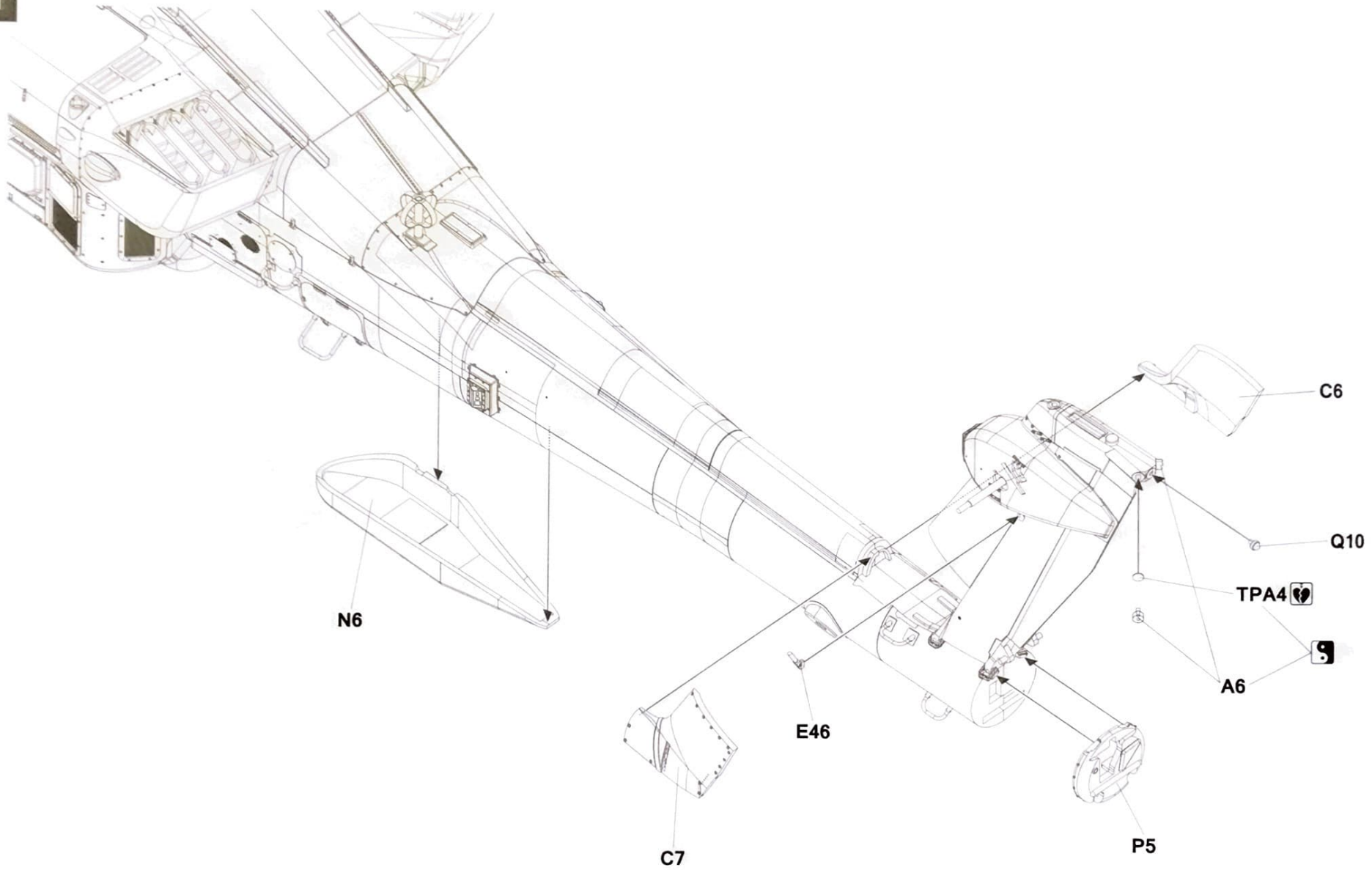
C6
Q10
TPA4
A6
N6
E46
C7
P5

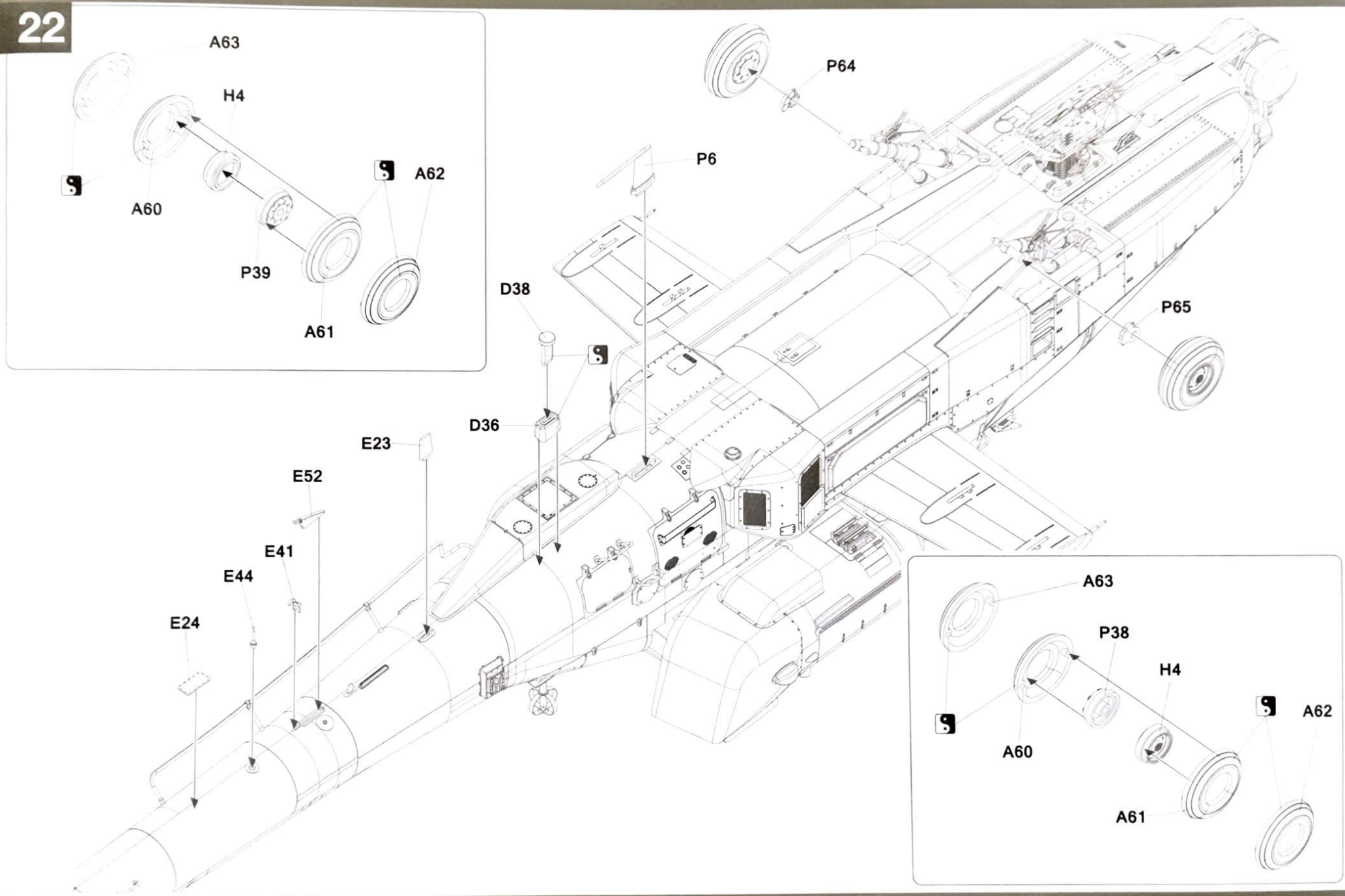
A63
H4
A60
A62
P39
A61
P64
P6
P65
D38
D36
E23
E52
E41
E44
E24
A63
P38
H4
A60
A62
A61

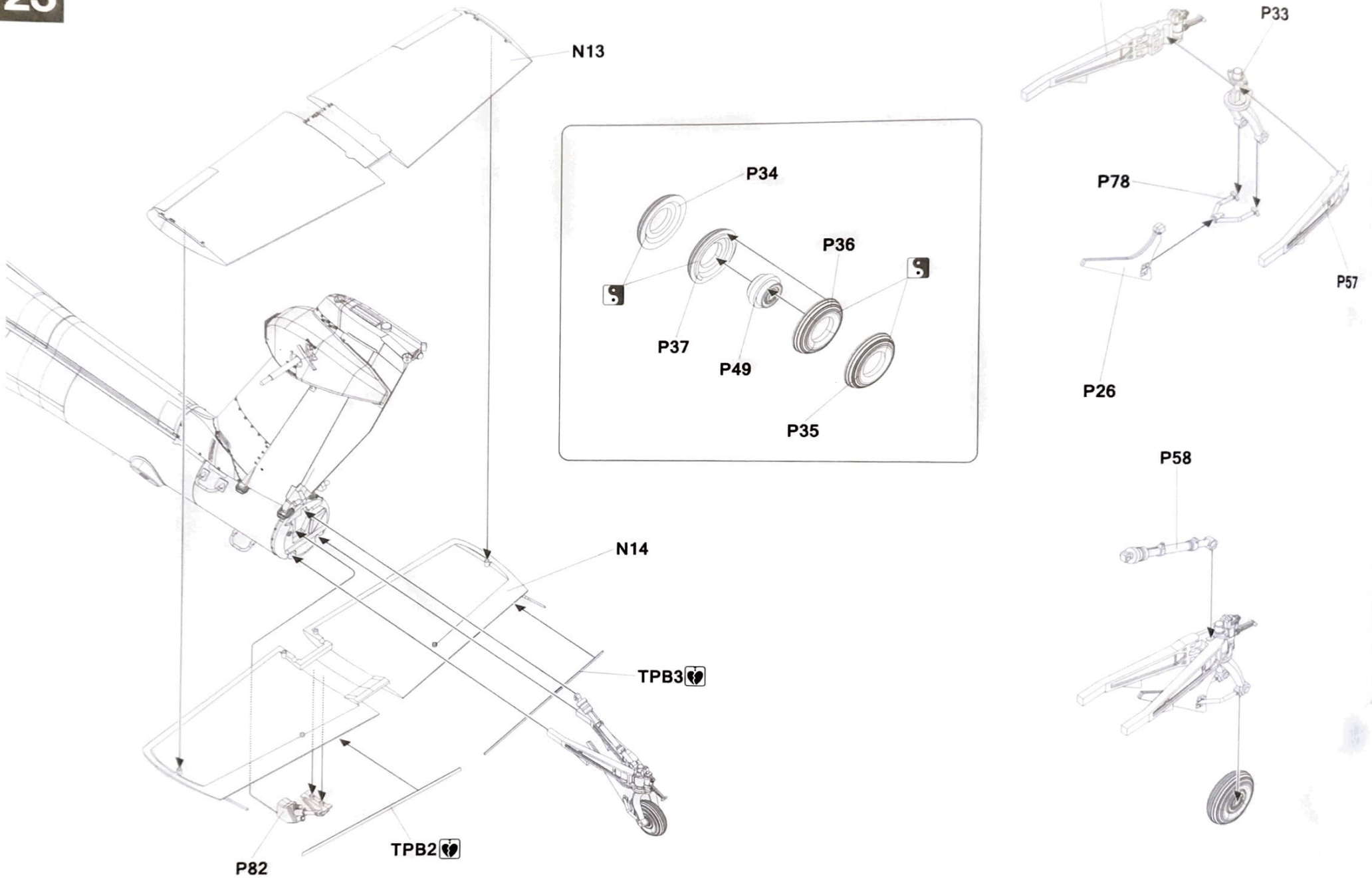
N13
P34
P36
P37
P49
P35
P56
P33
P78
P57
P26
P58
N14
TPB3
TPB2
P82

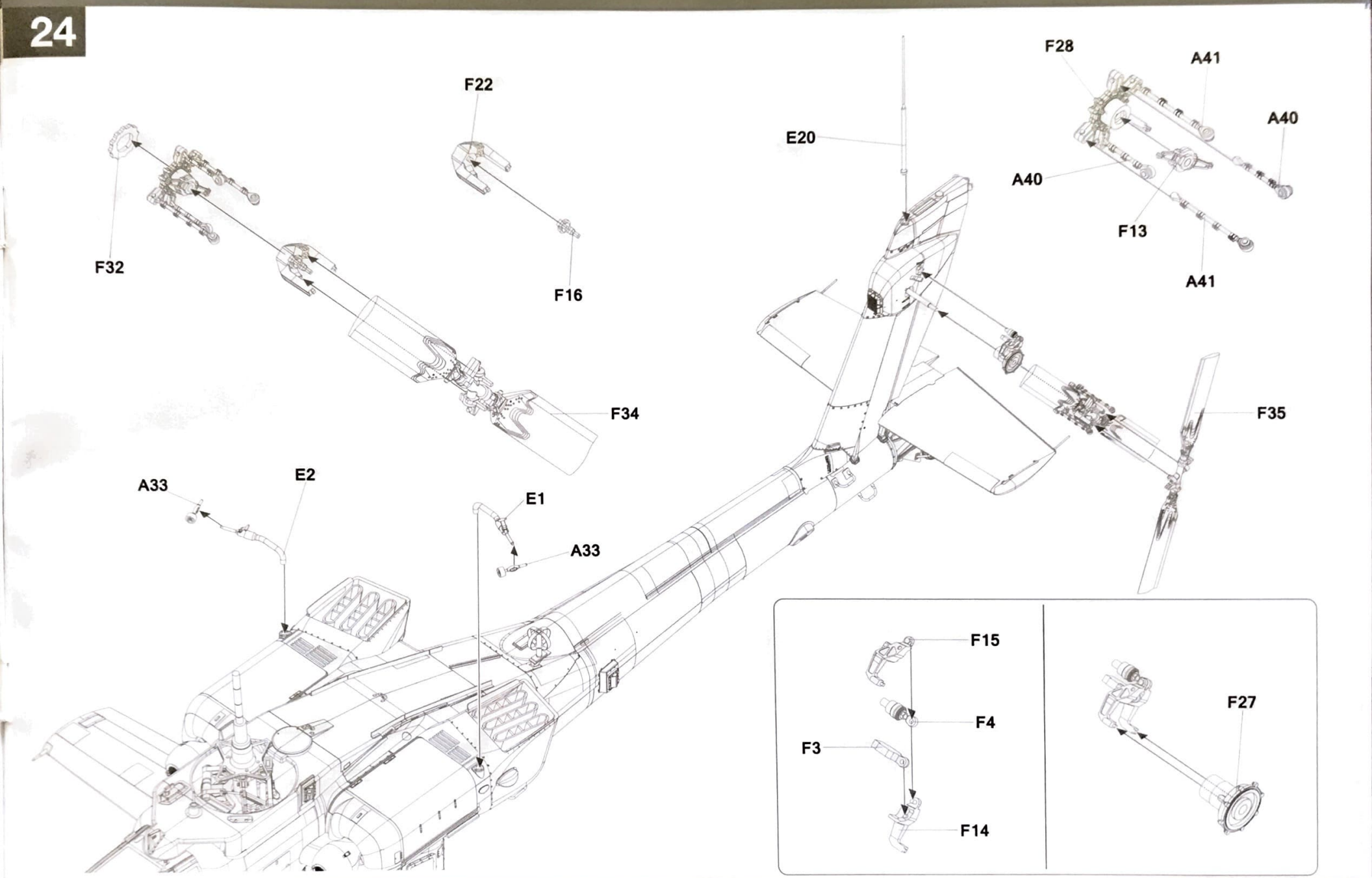
F22
F32
F16
F34
E20
F28
A41
A40
A40
F13
A41
F35
A33
E2
E1
A33
F15
F4
F3
F14
F27

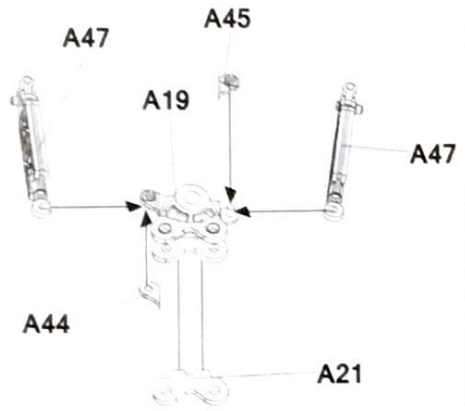
A47
A45
A19
A47
A44
A21

Make 4

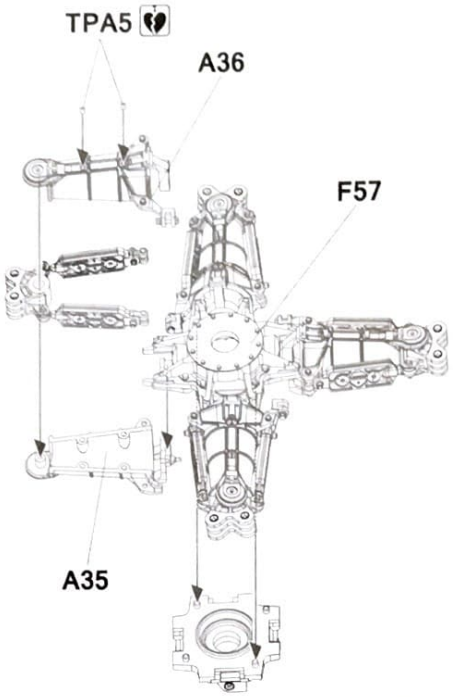
TPA5
A36
F57
A35

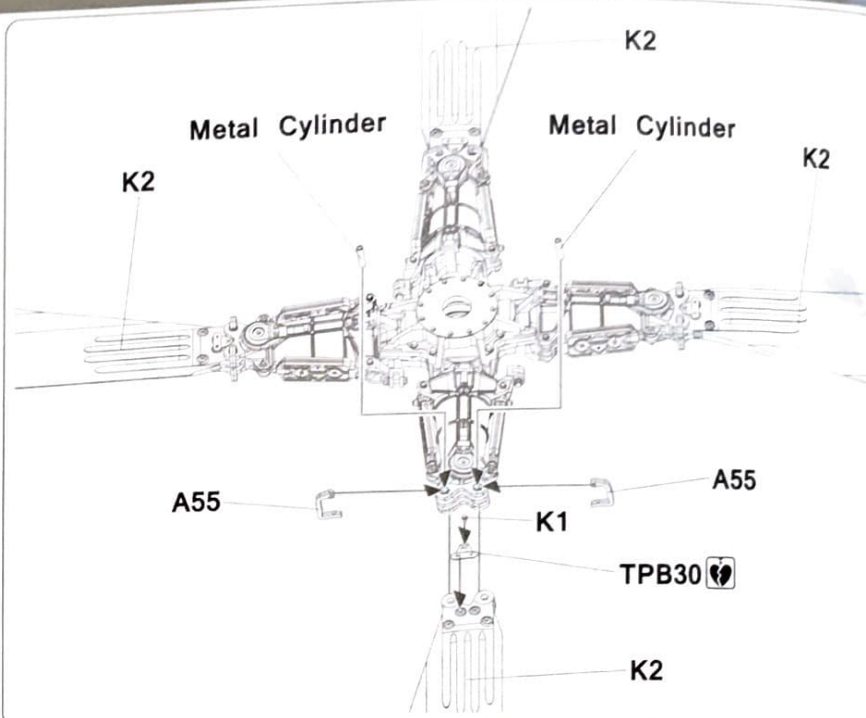
K2
Metal Cylinder
Metal Cylinder
K2
K2
A55
A55
K1
TPB30
K2

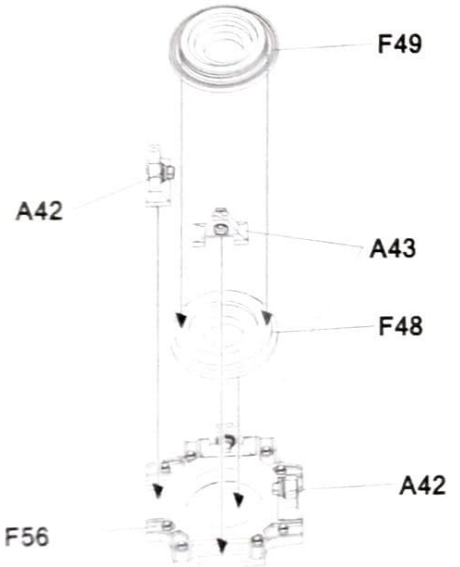
F49
A42
A43
F48
A42
F56

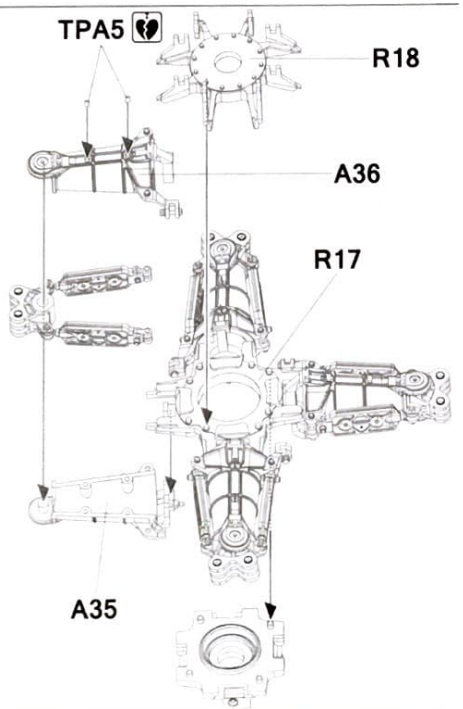
TPA5
R18
A36
R17
A35

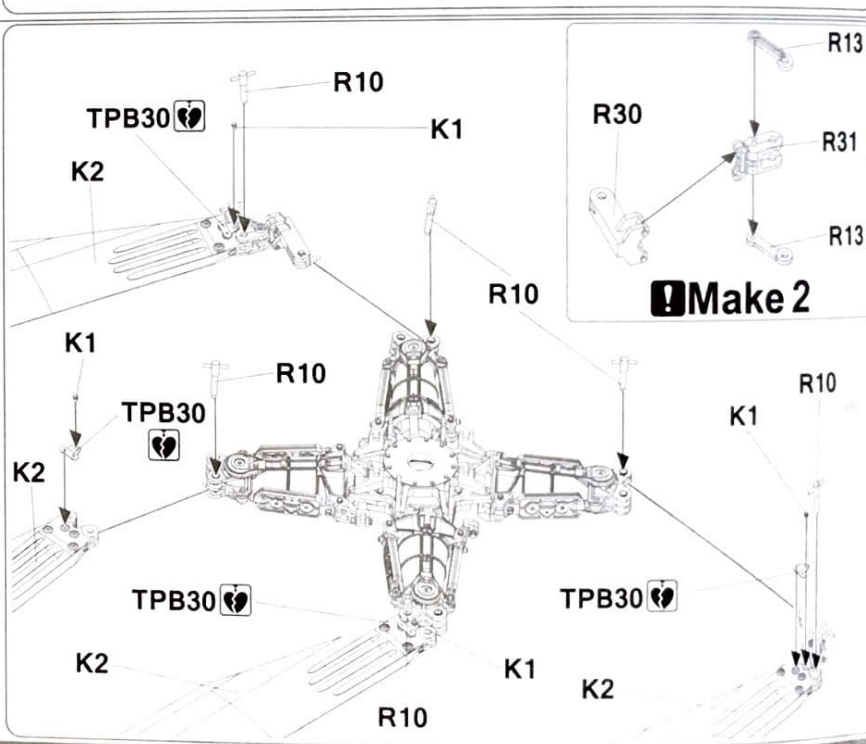
R10
TPB30
K1
K2
R10
K1
R10
TPB30
K2
R10
K1
TPB30
TPB30
K2
K1
K2
R10

R13
R30
R31
R13

Make 2

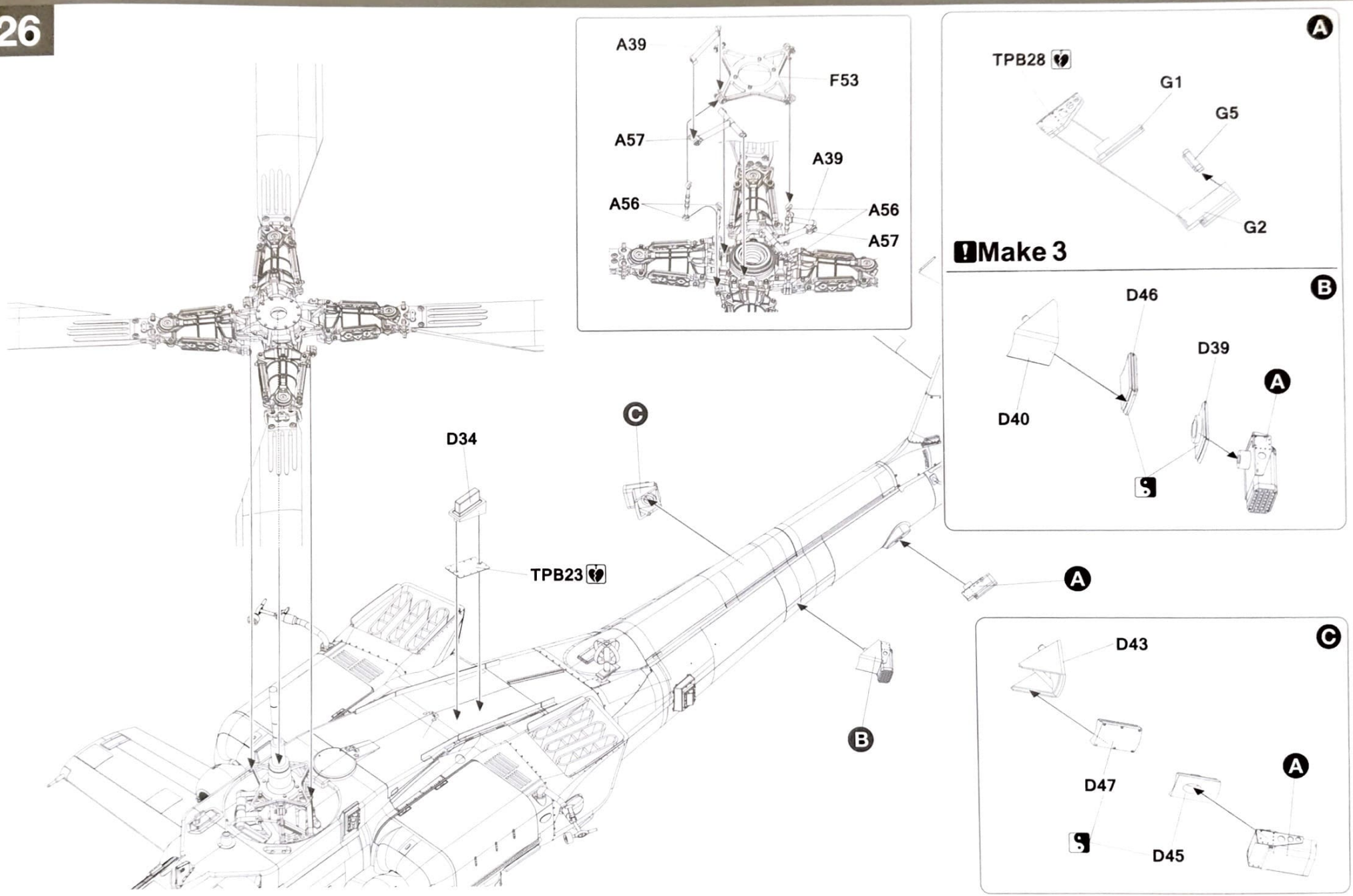
A39
F53
A57
A39
A56
A56
A57
TPB28
G1
G5
G2
A
Make 3
B
D46
D39
D40
A
C
D34
TPB23
A
B
C
D43
D47
A
D45

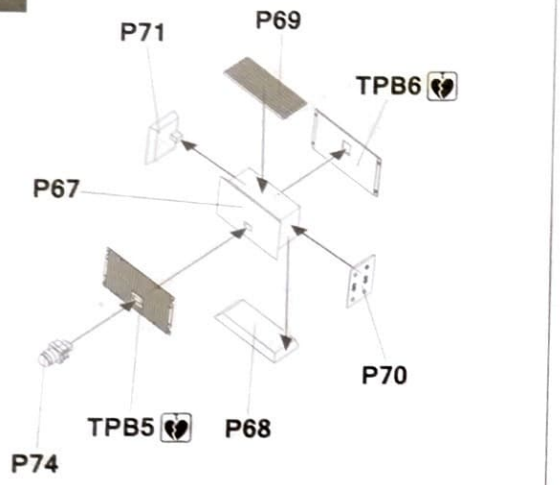
P71
P69
TPB6
P67
P70
TPB5
P68
P74

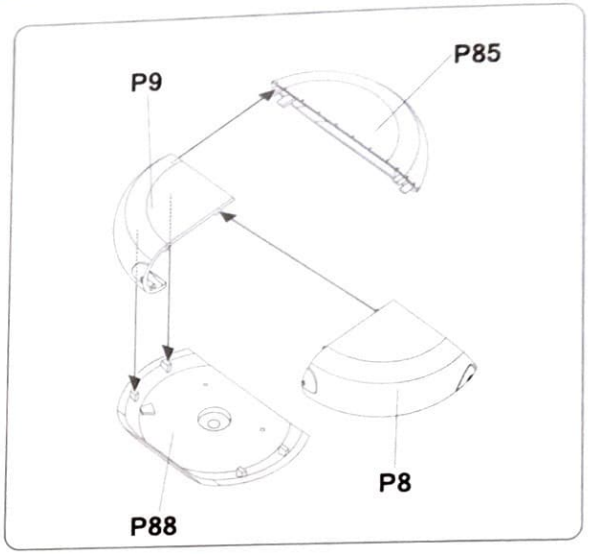
P85
P9
P8
P88

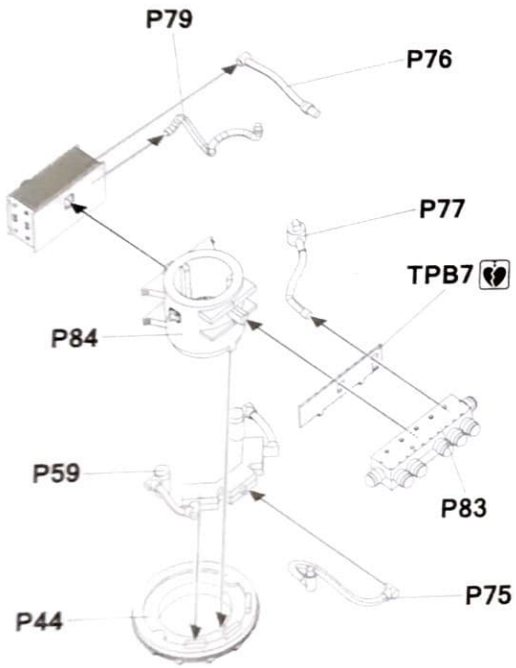
P79
P76
P77
TPB7
P84
P59
P83
P75
P44

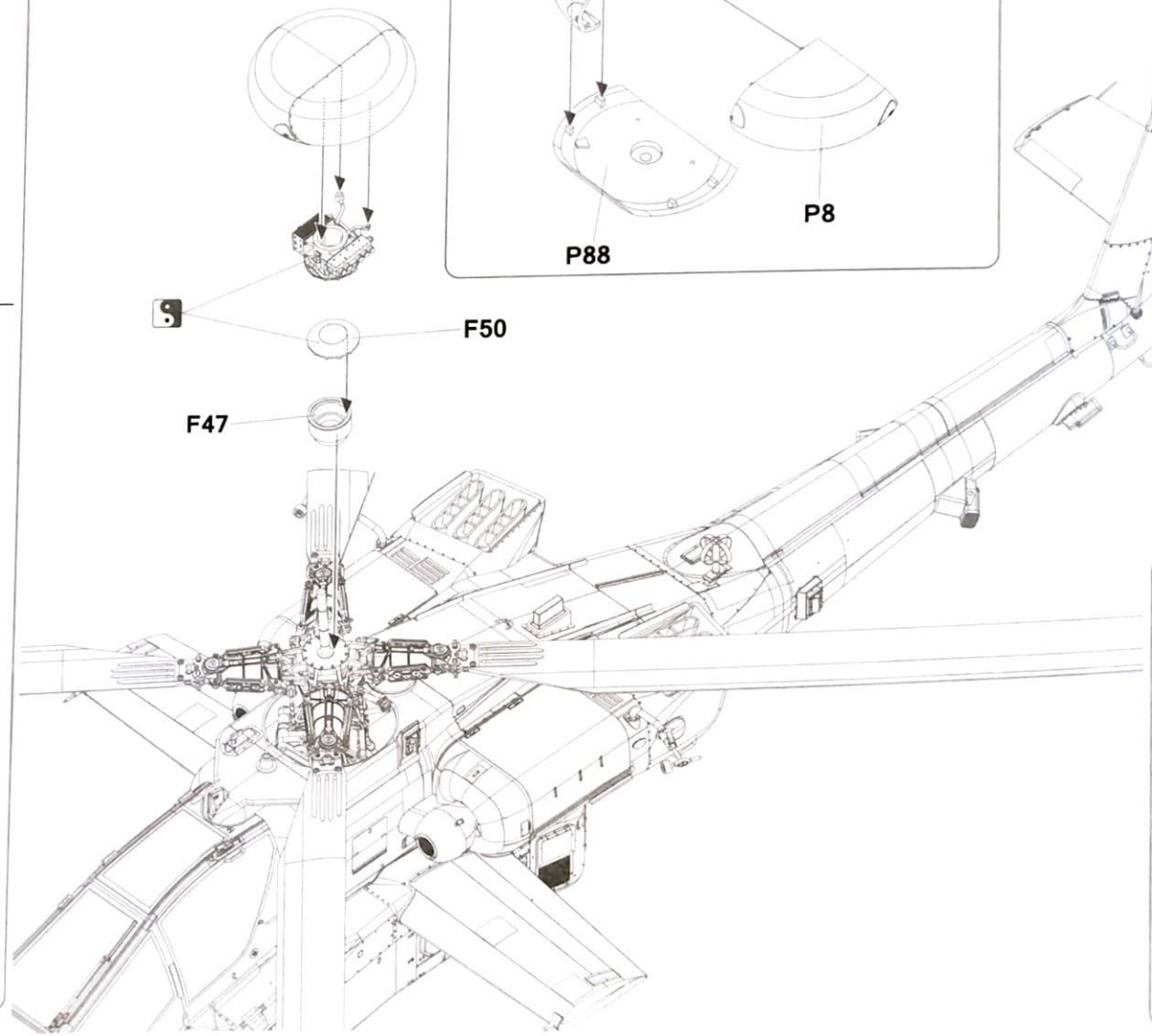
F50
F47

28

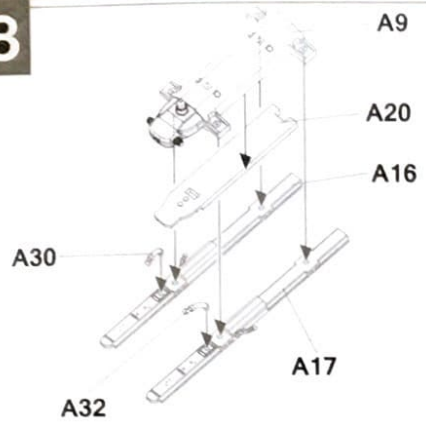

Make 2

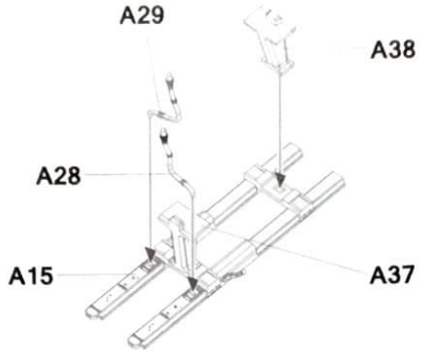

Make 2

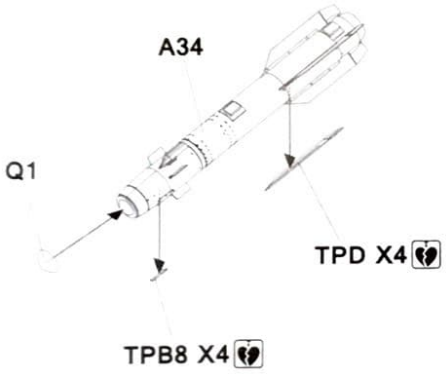

Make 8

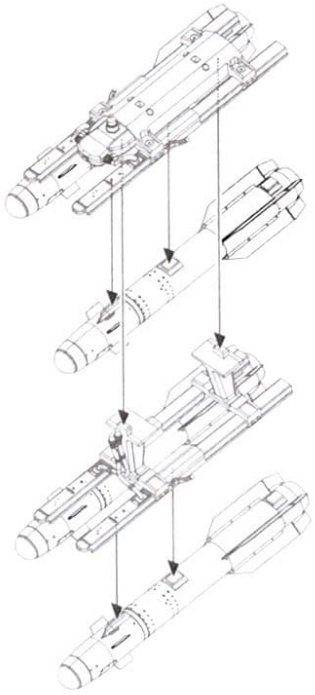

Make 2

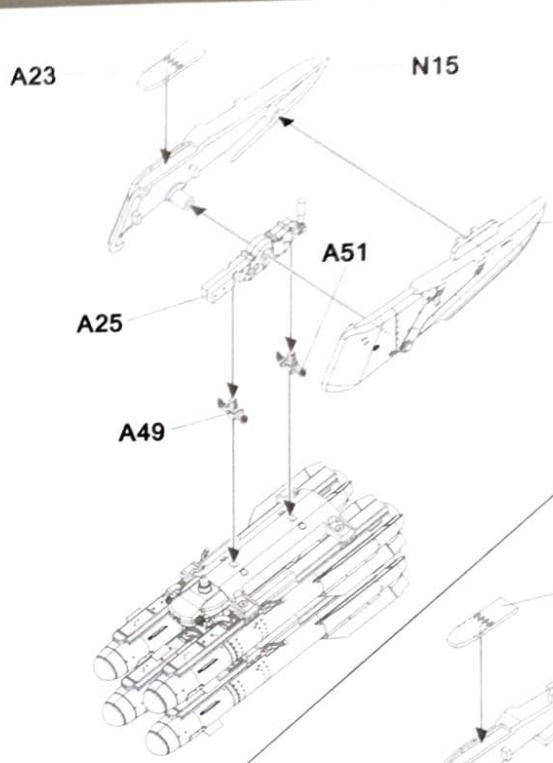

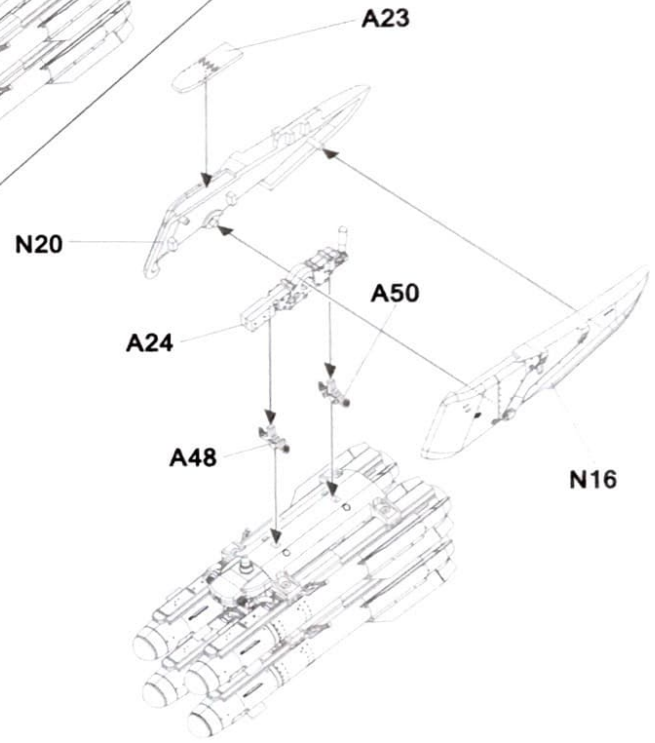

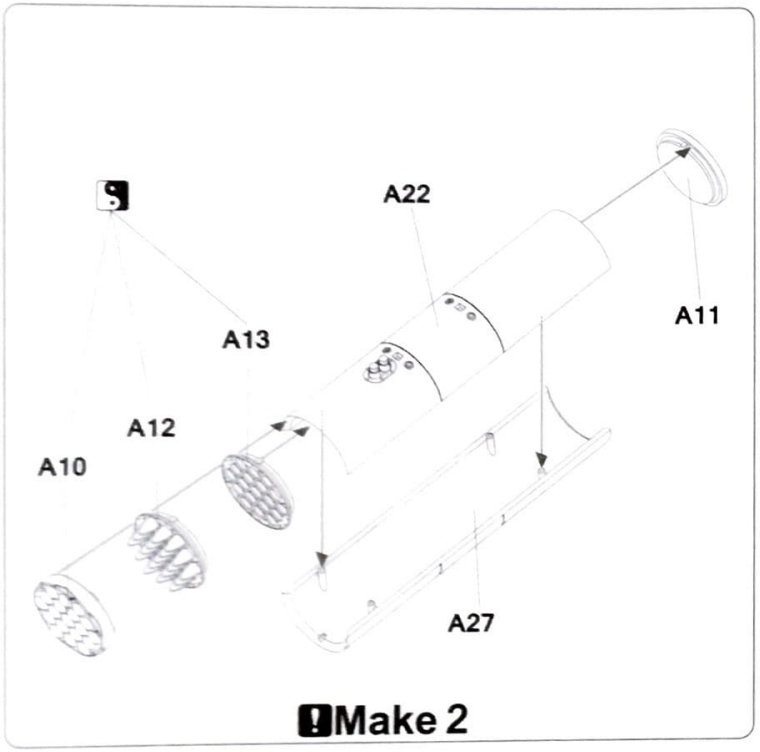
A22
A11
A13
A12
A10
A27
Make 2

C

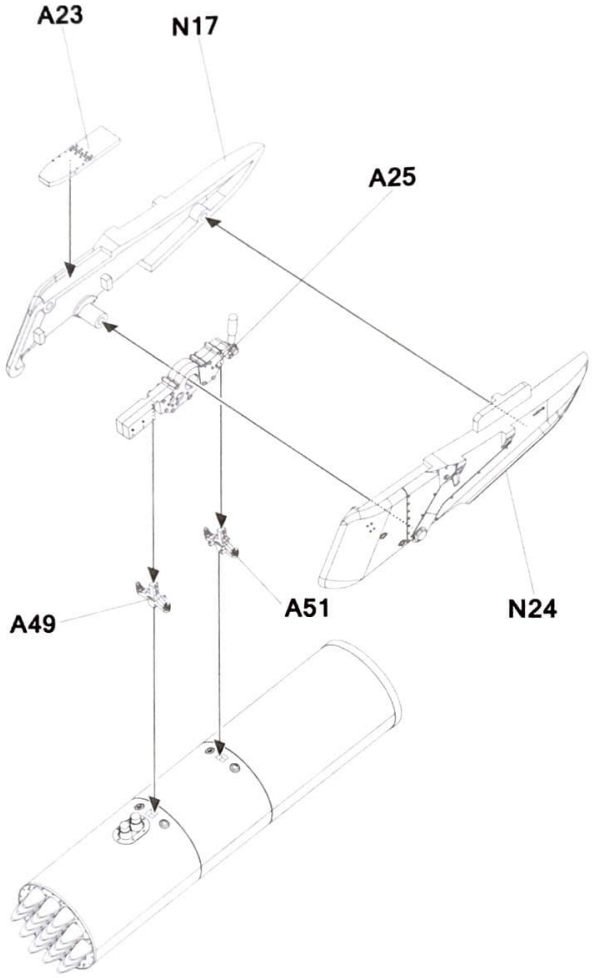
A23
N17
A25
A49
A51
N24

D

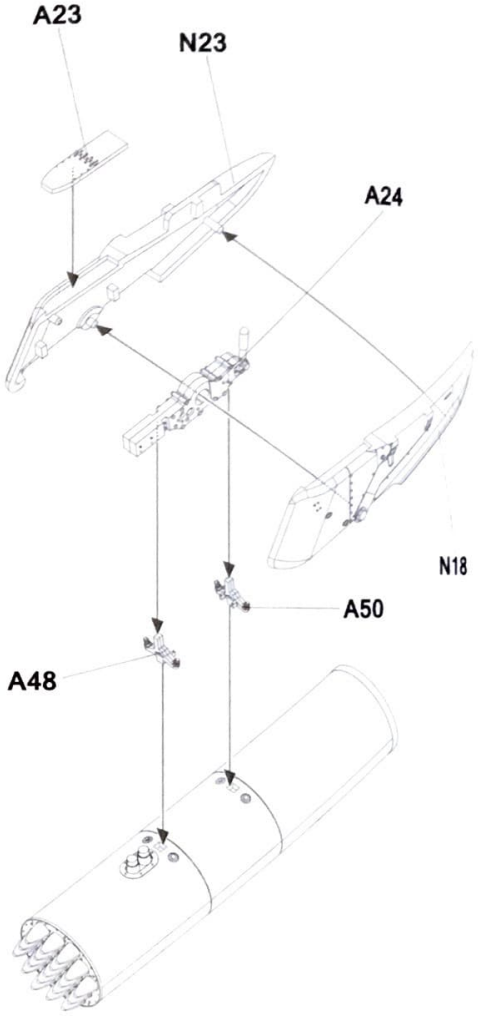
A23
N23
A24
N18
A50
A48

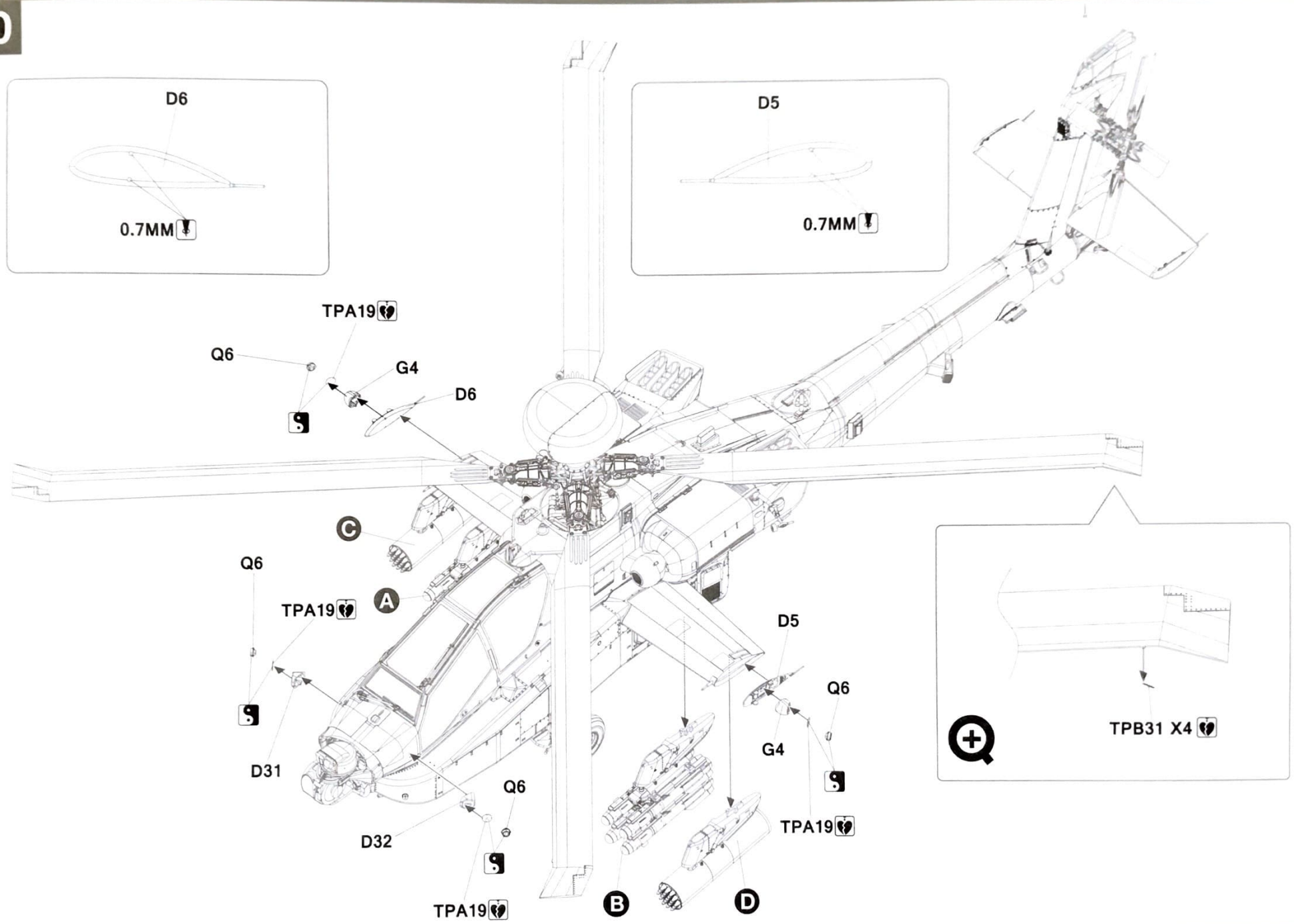
D6
0.7MM
D5
0.7MM
TPA19
Q6
G4
D6
C
Q6
A
TPA19
D31
Q6
D32
TPA19
B
D5
Q6
G4
TPA19
D
TPB31 X4

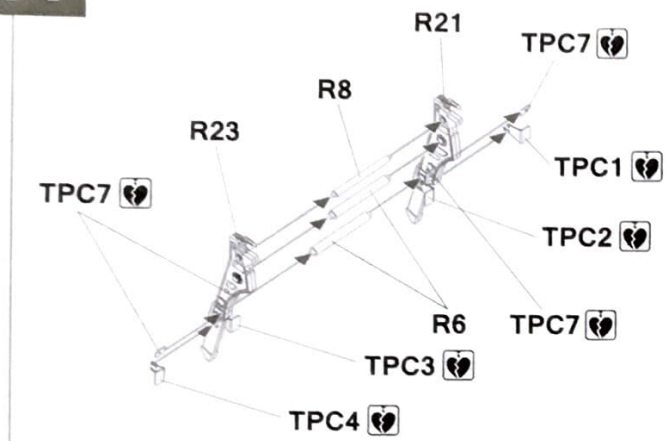
R21
TPC7
R8
R23
TPC1
TPC7
TPC2
R6
TPC7
TPC3
TPC4

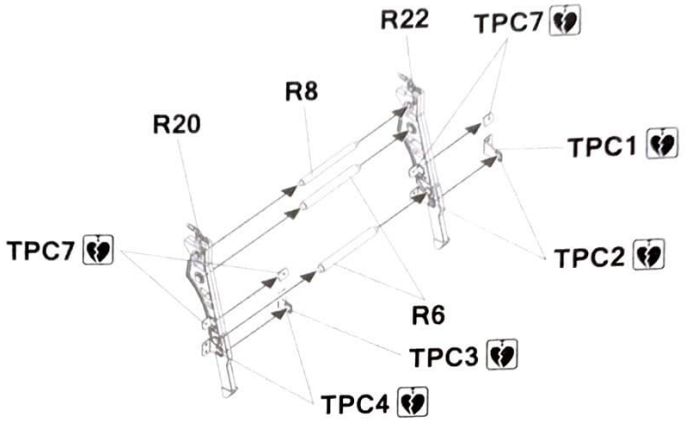
R22
TPC7
R8
R20
TPC1
TPC7
TPC2
R6
TPC3
TPC4

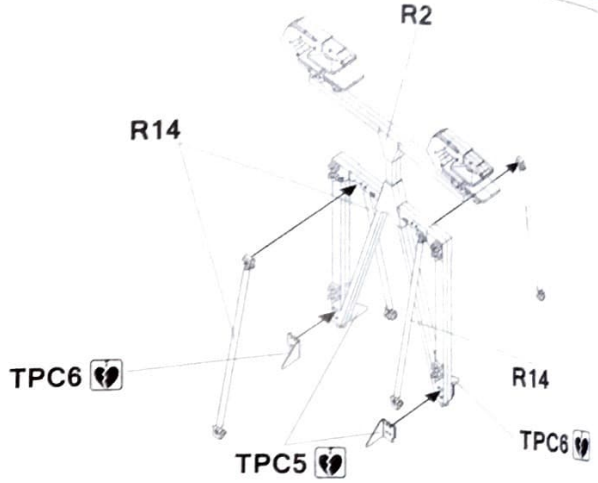
R2
R14
TPC6
R14
TPC5
TPC6

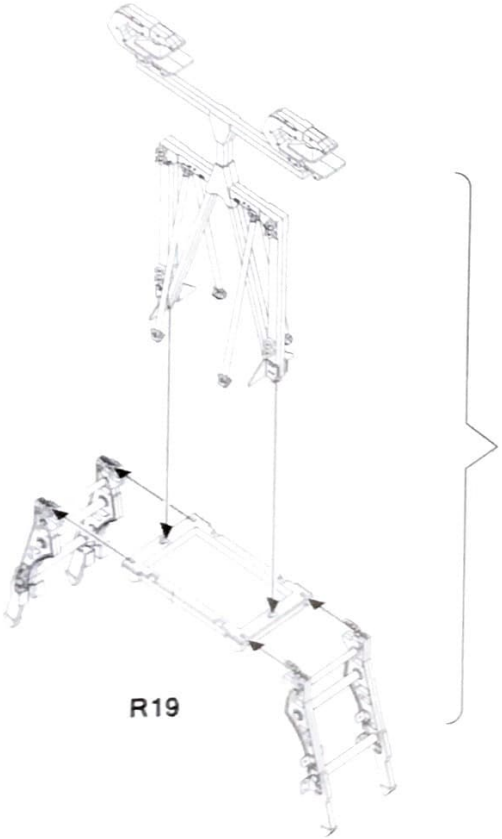
R19

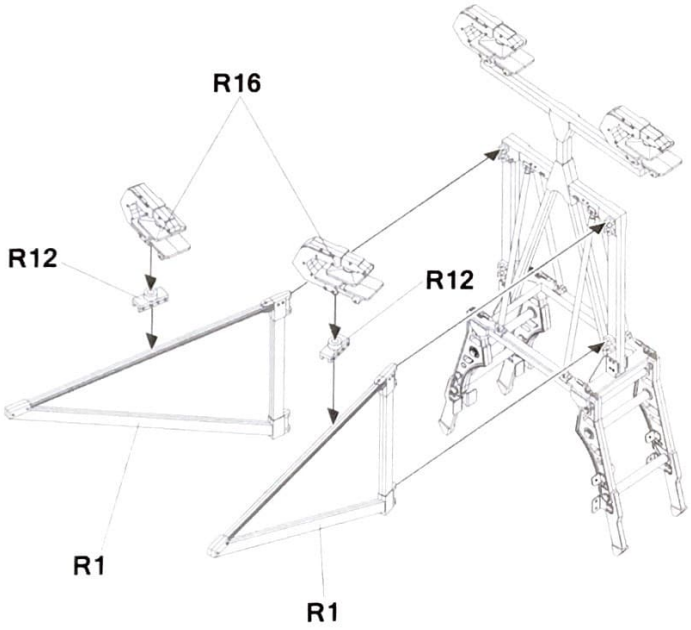
R16
R12
R12
R1
R1

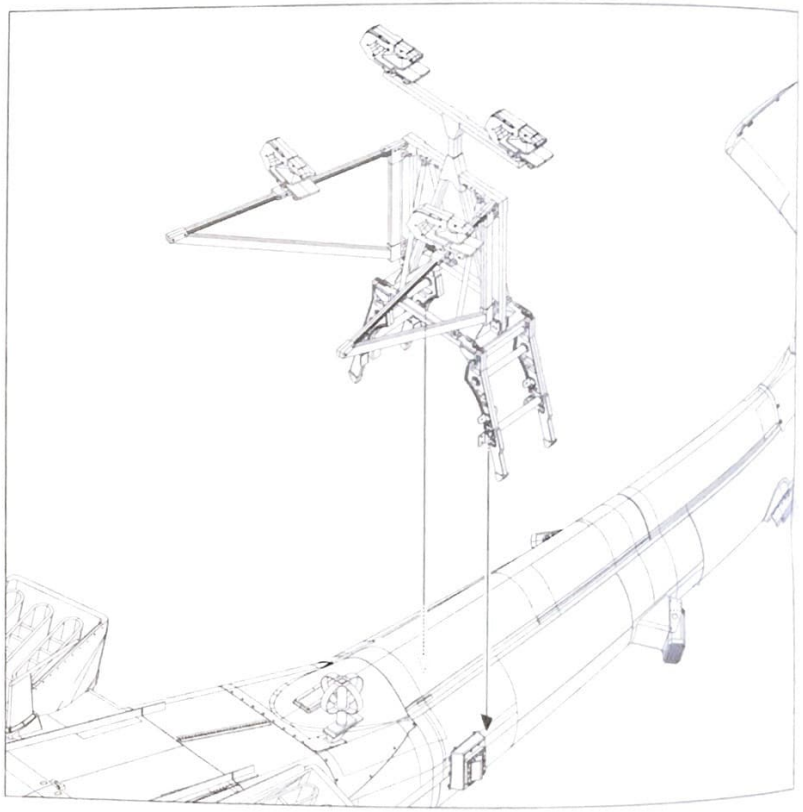

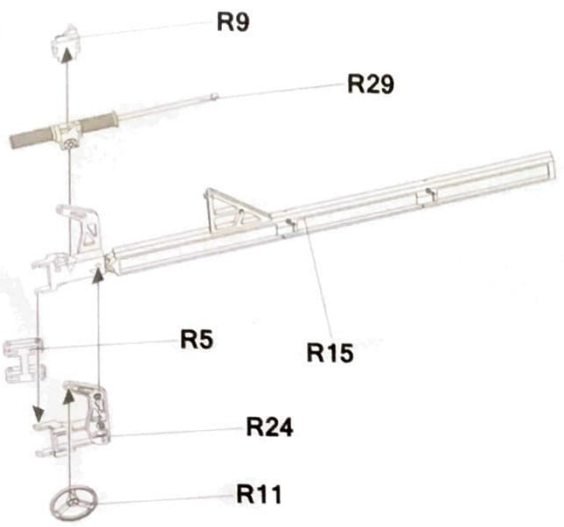
R9
R29
R5
R15
R24
R11

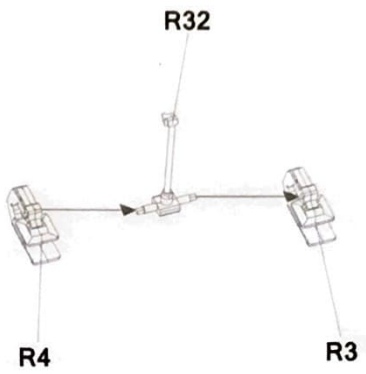
R32
R4
R3

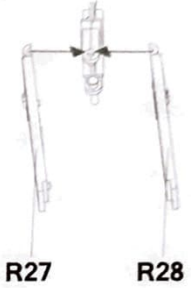
R26
R27
R28

R25
R7

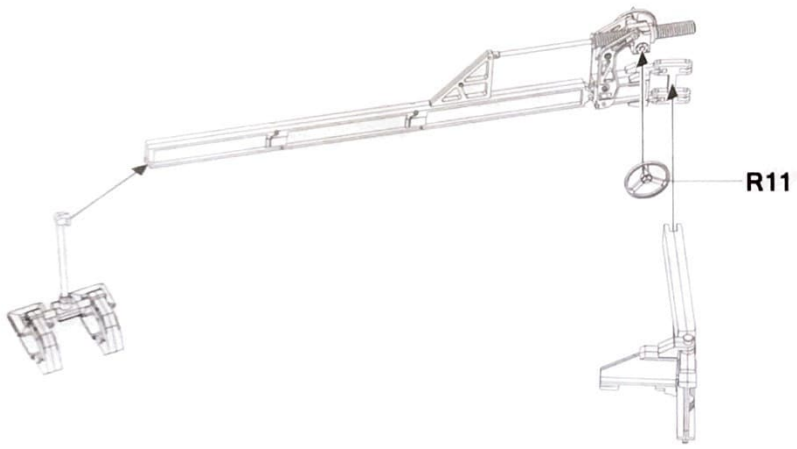
R11

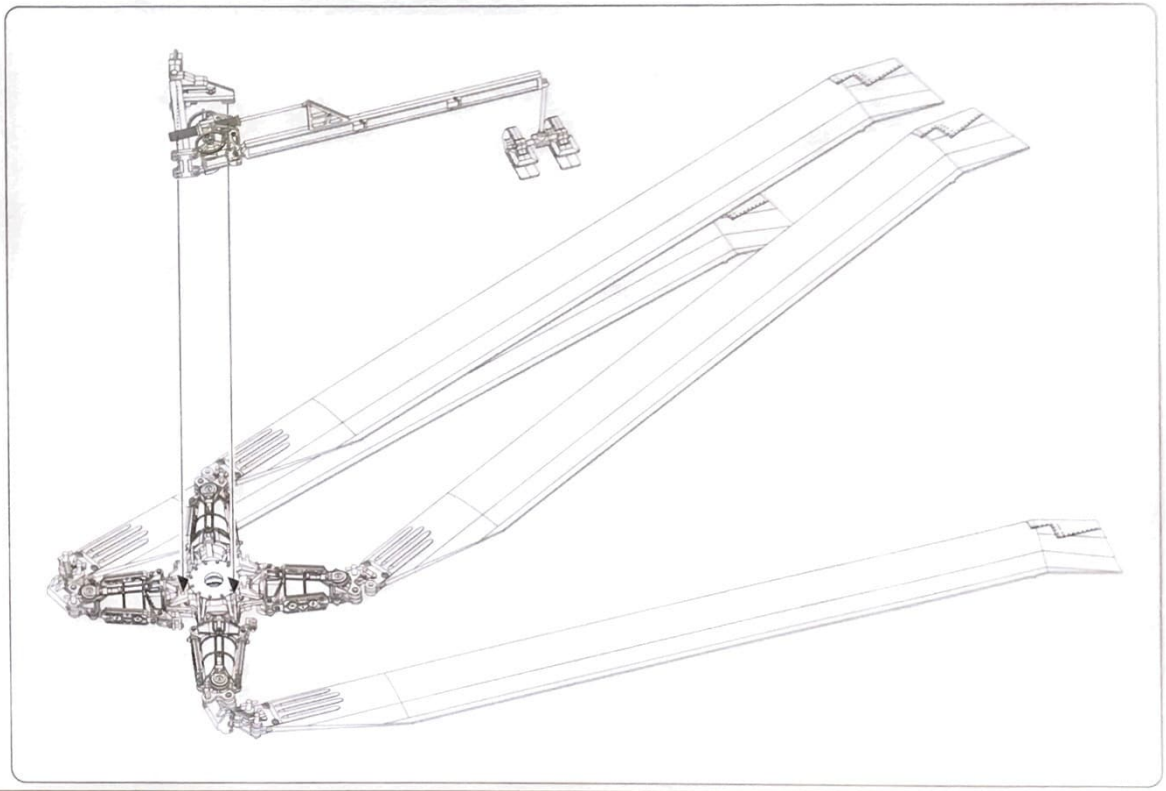

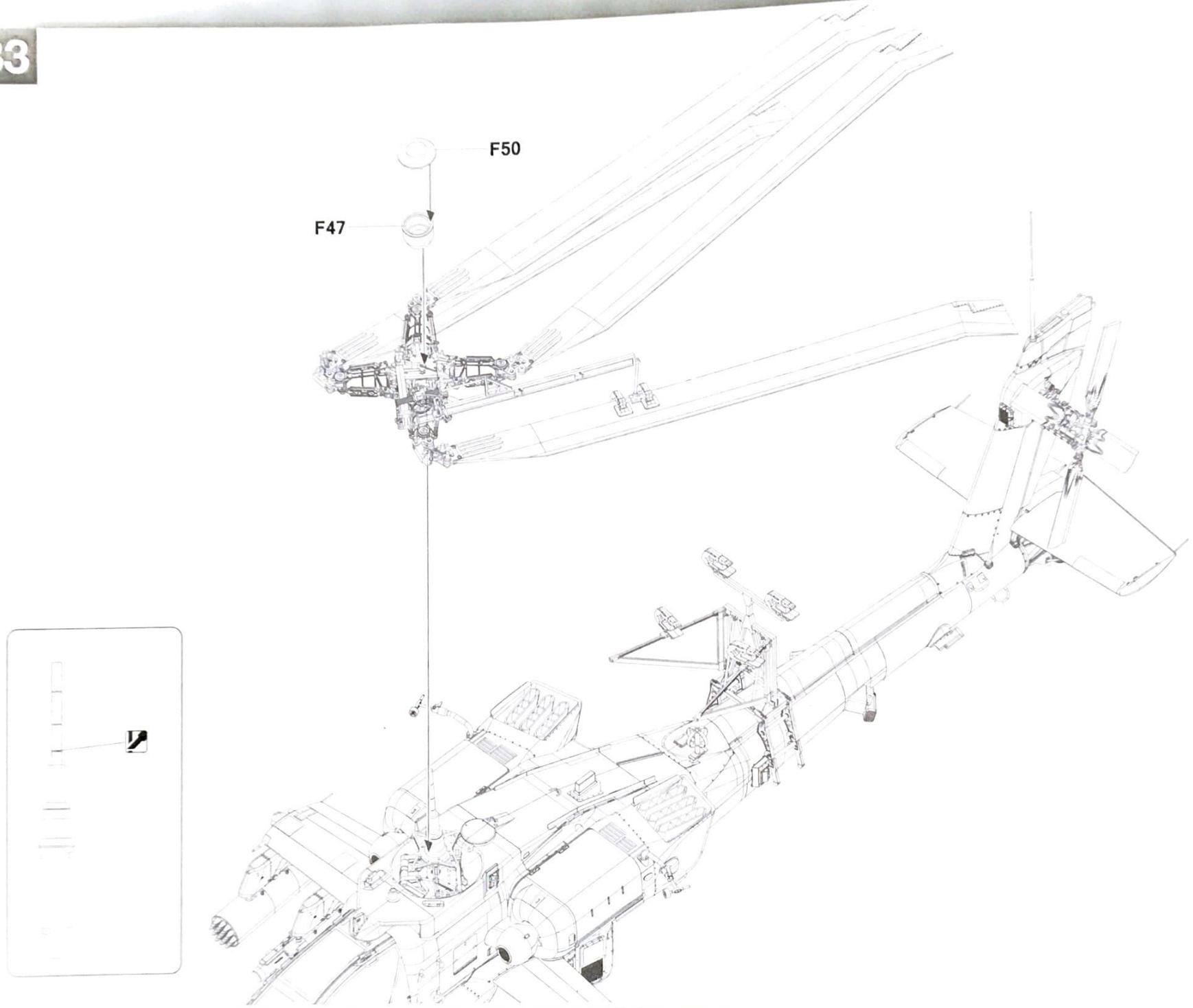
F50
F47

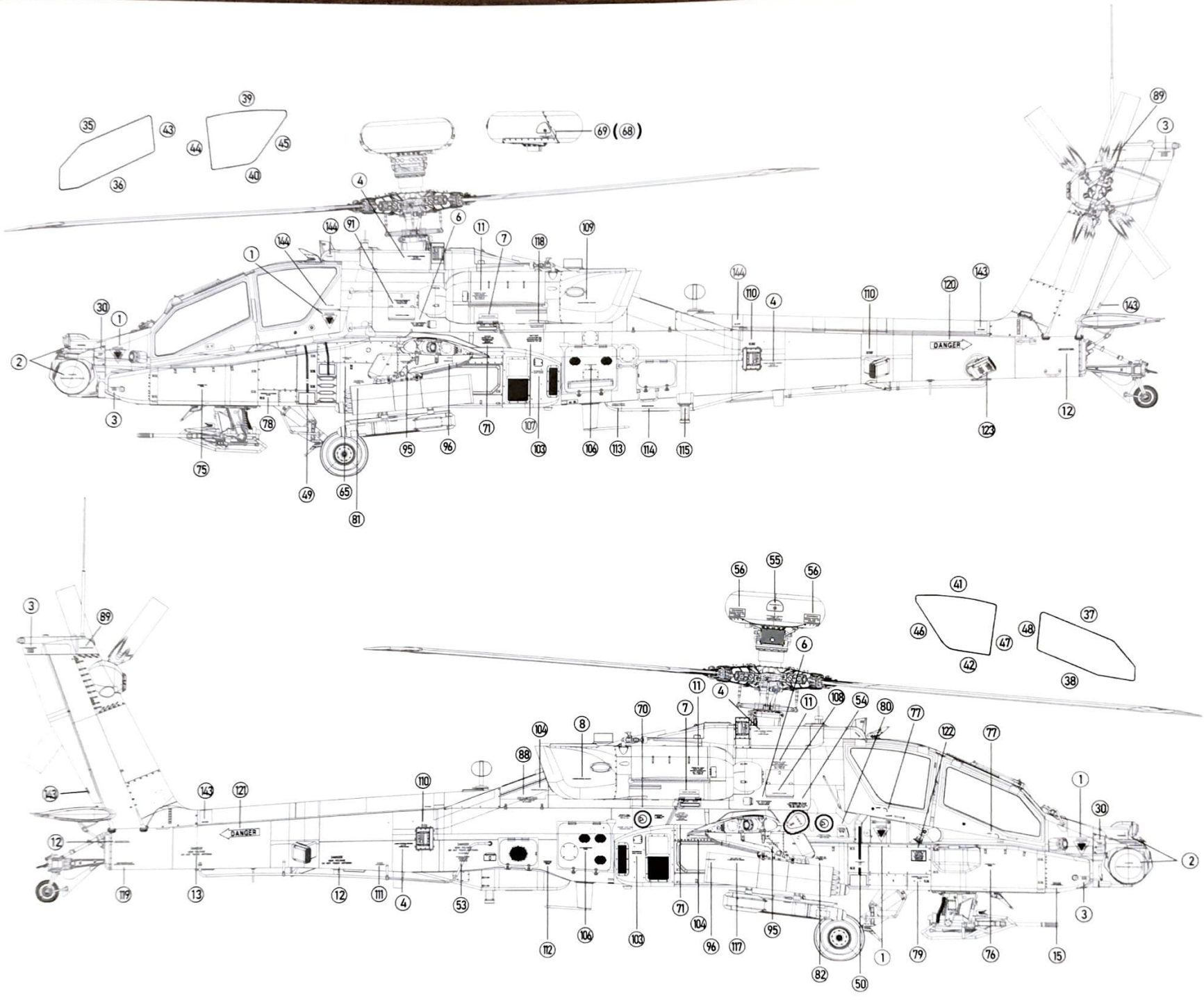
DANGER
DANGER

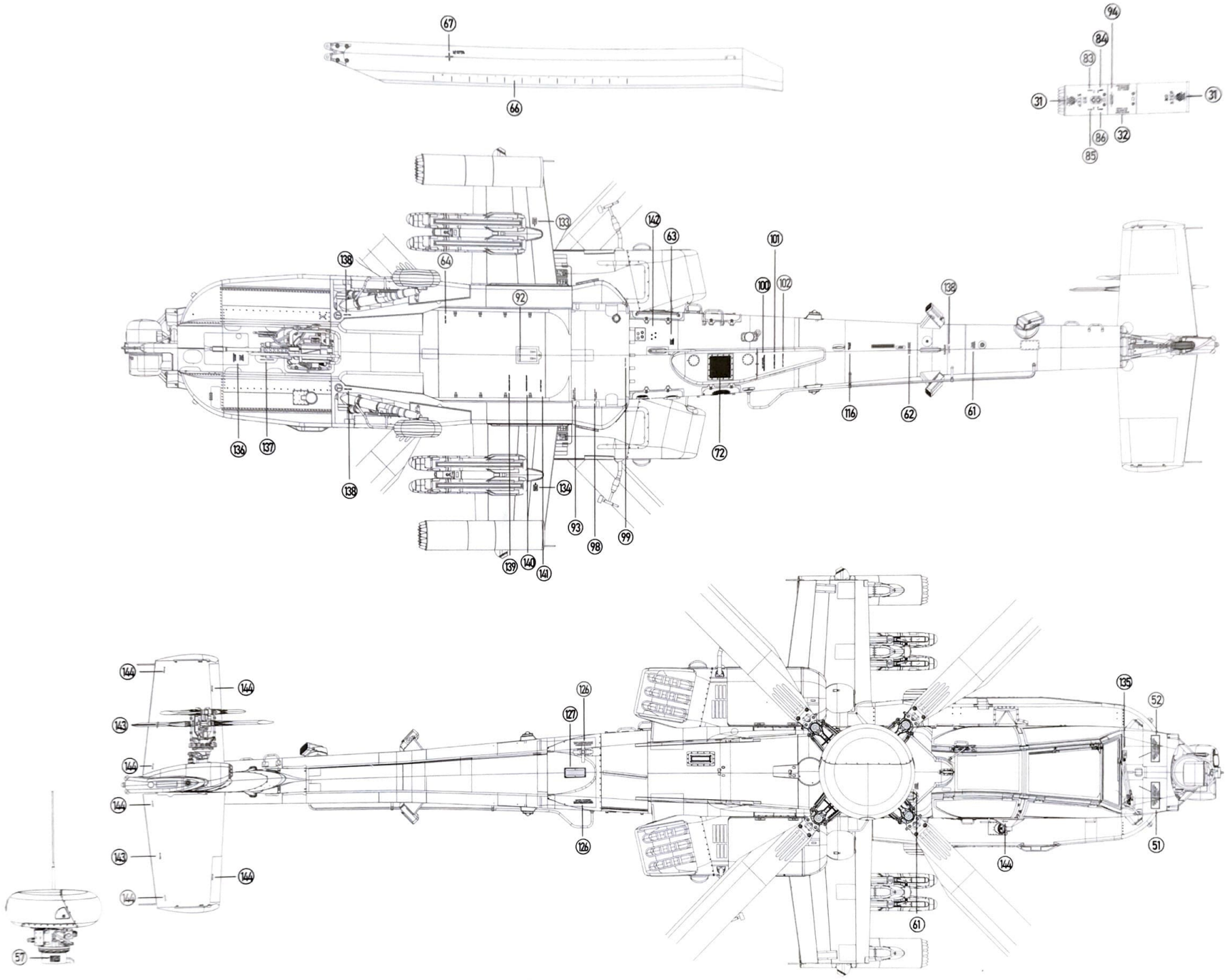
67
66
94
84
83
31
31
86
32
85
133
142
63
101
138
64
92
100
102
138
136
137
138
134
93
98
99
72
116
62
61
139
140
141
144
144
143
144
144
143
144
144
126
127
126
135
52
51
144
61
57

03.04.2608
TAKOM
AH-64D BLOCK II LATE VERSION
APACHE LONGBOW

Painting and Marking Guide
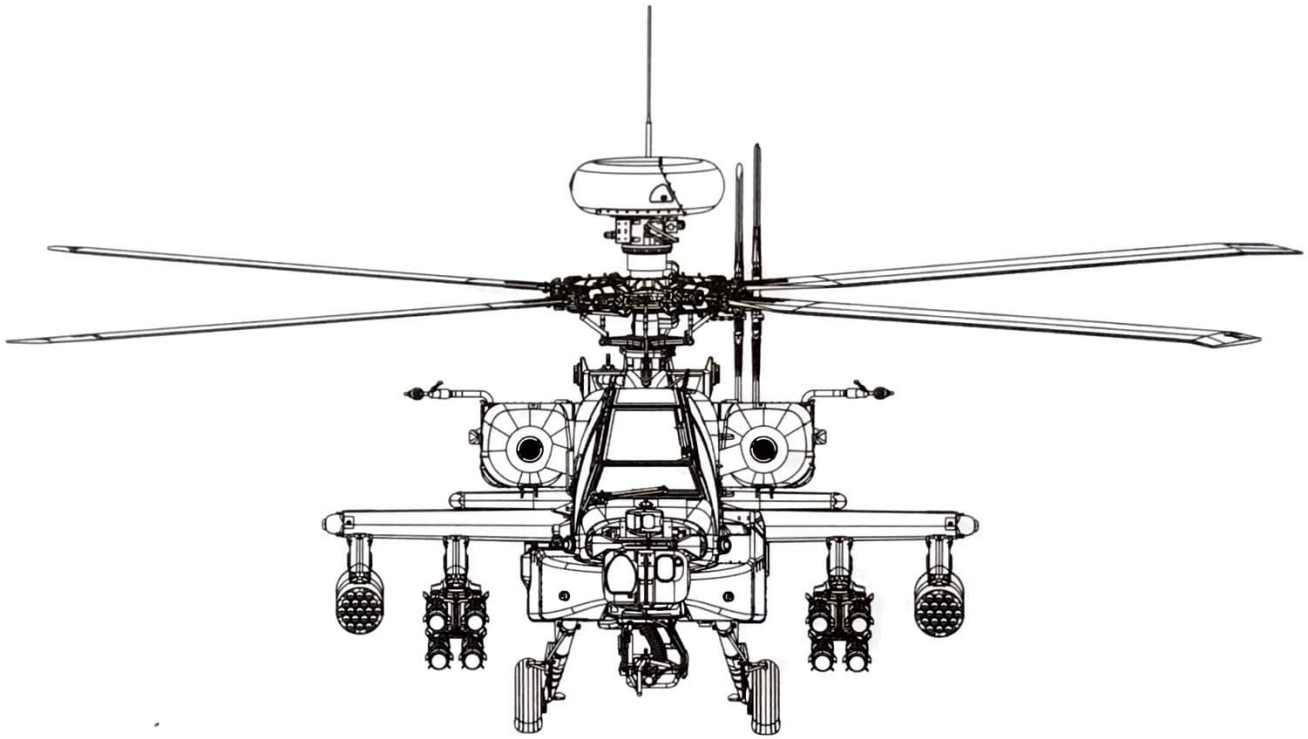
Painting and Marking Guide