M1A2 Abrams

1/35 scale detail set for Shanghai Dragon kit

35 259

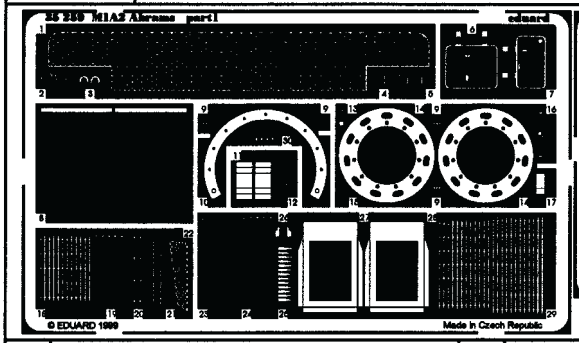

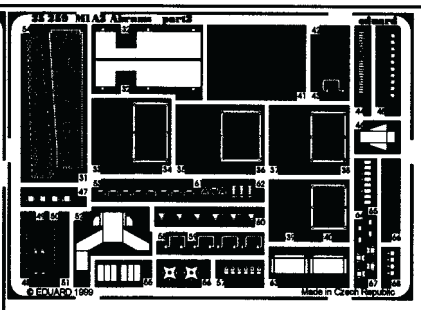

35 259

OPPOSITE SIDE
REMOVE
REPLACE
GRIND
BEND

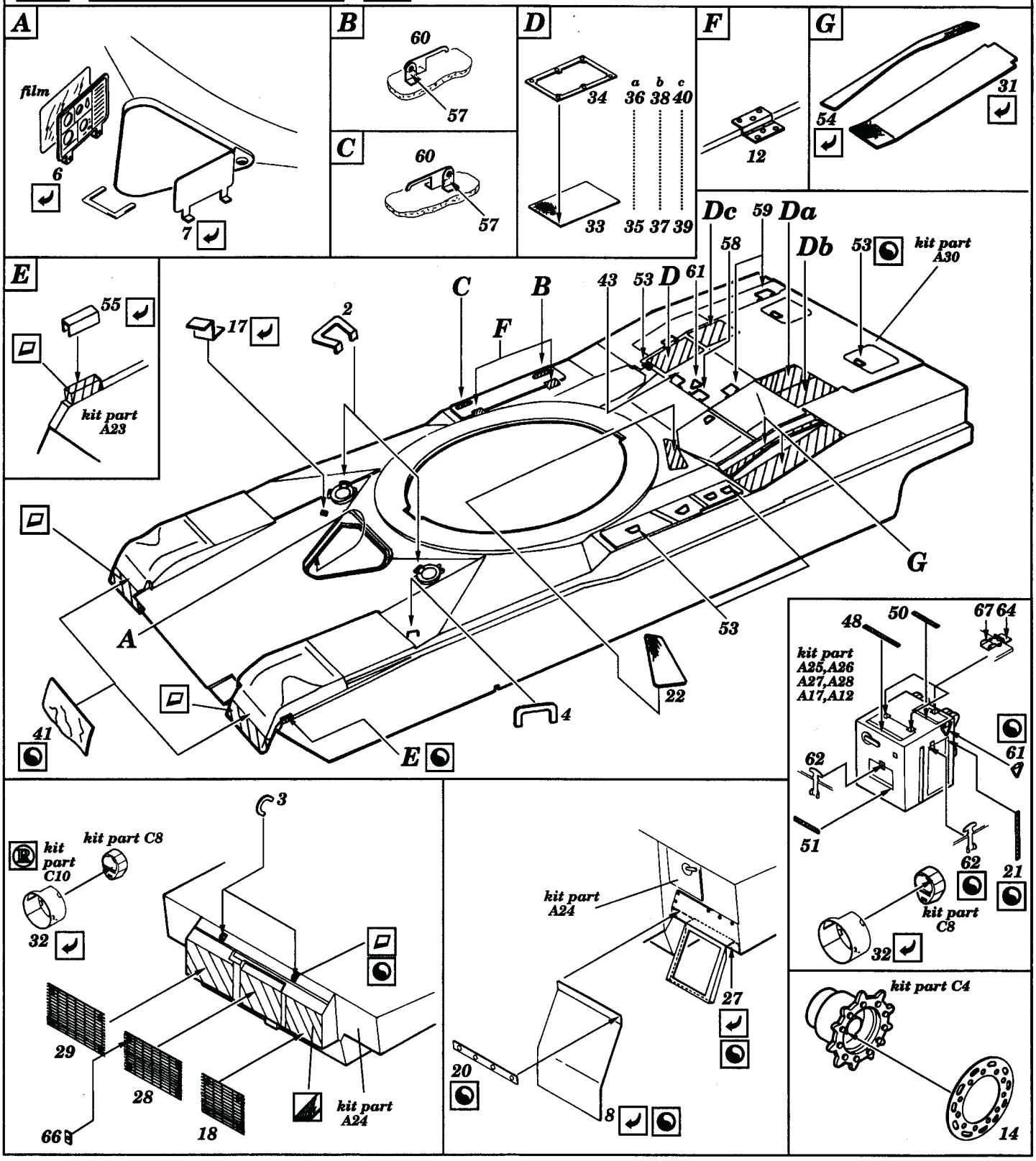

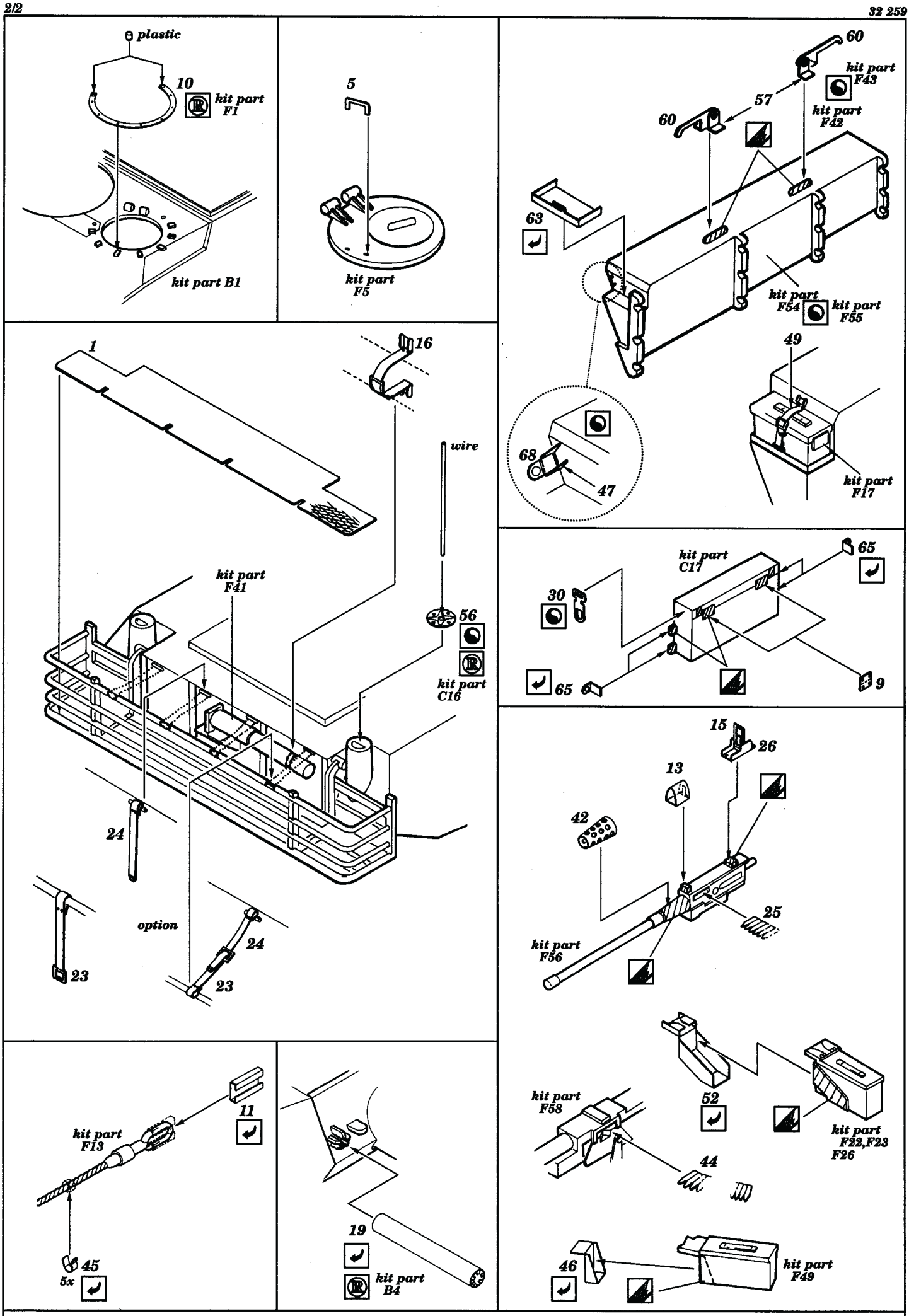
plastic
10
kit part F1
kit part B1
5
kit part F5
60
kit part F43
57
kit part F42
60
63
kit part F54
kit part F55
49
68
47
kit part F17
1
16
wire
kit part F41
56
kit part C16
24
option
24
23
23
kit part C17
65
30
65
9
15
26
13
42
25
kit part F56
kit part F58
52
kit part F22,F23 F26
44
46
kit part F49
11
kit part F13
45
5x
19
kit part B4