Pz.Kpfw IA

1/35 scale detail set for HiPM kit

35 190

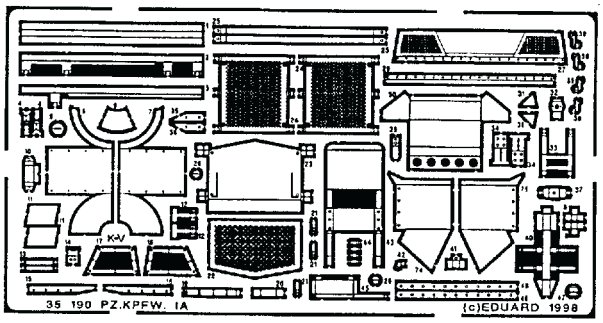

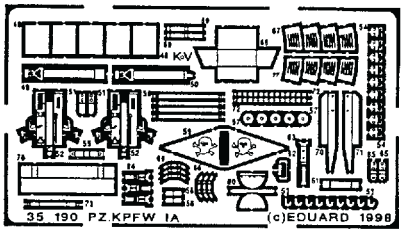

OPPOSITE SIDE
REMOVE
REPLACE
GRIND

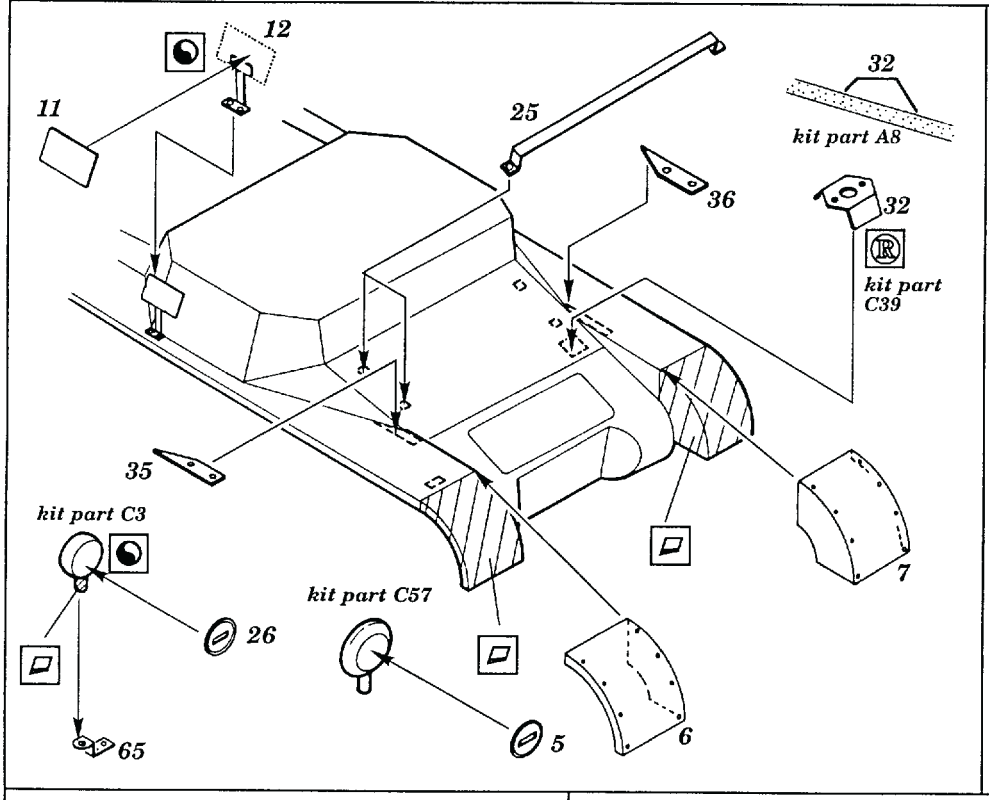

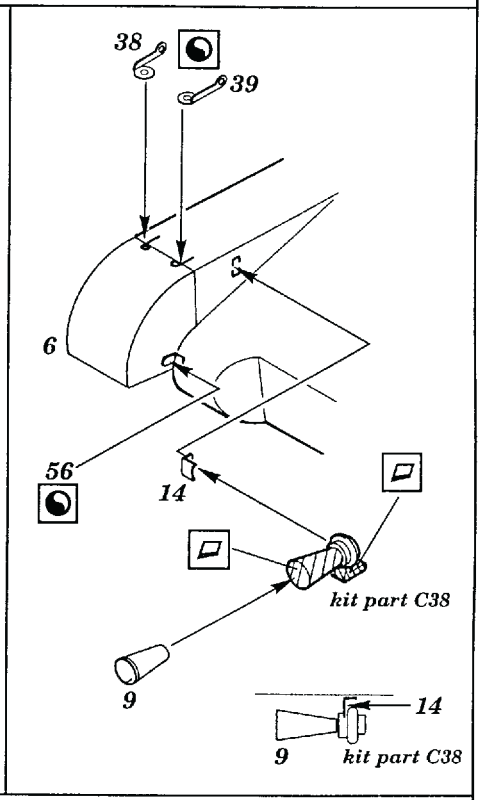

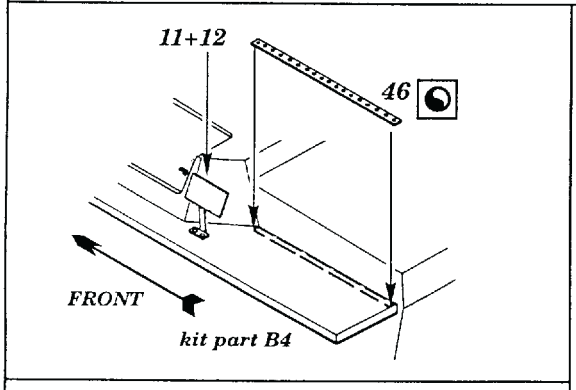

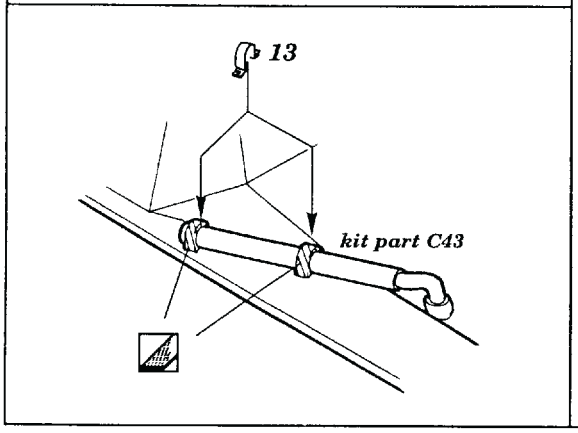

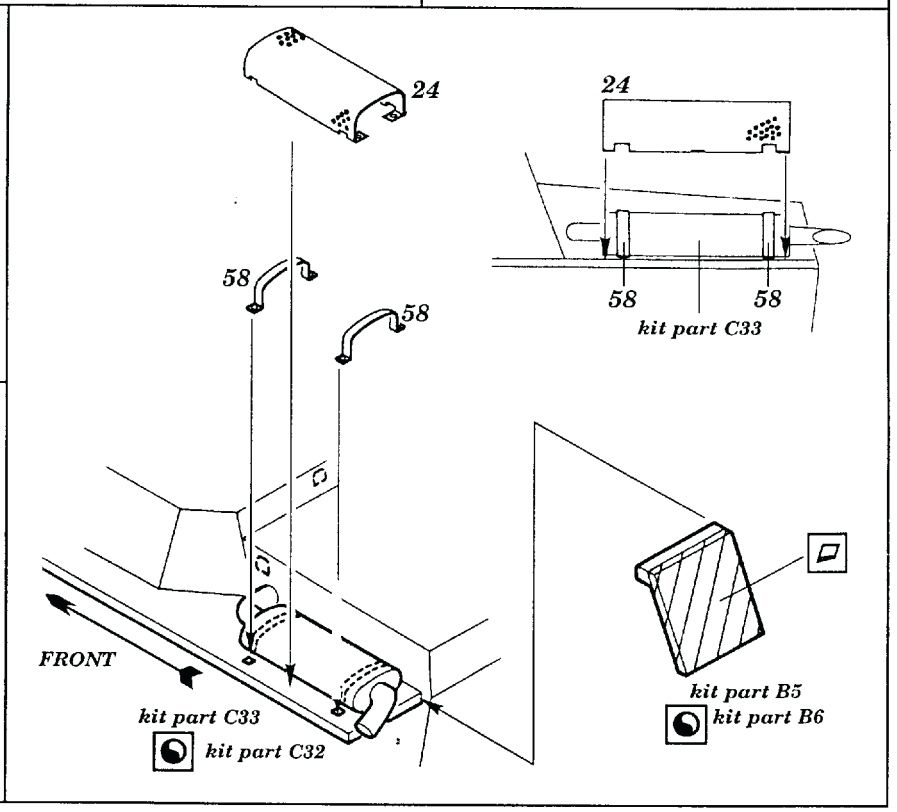

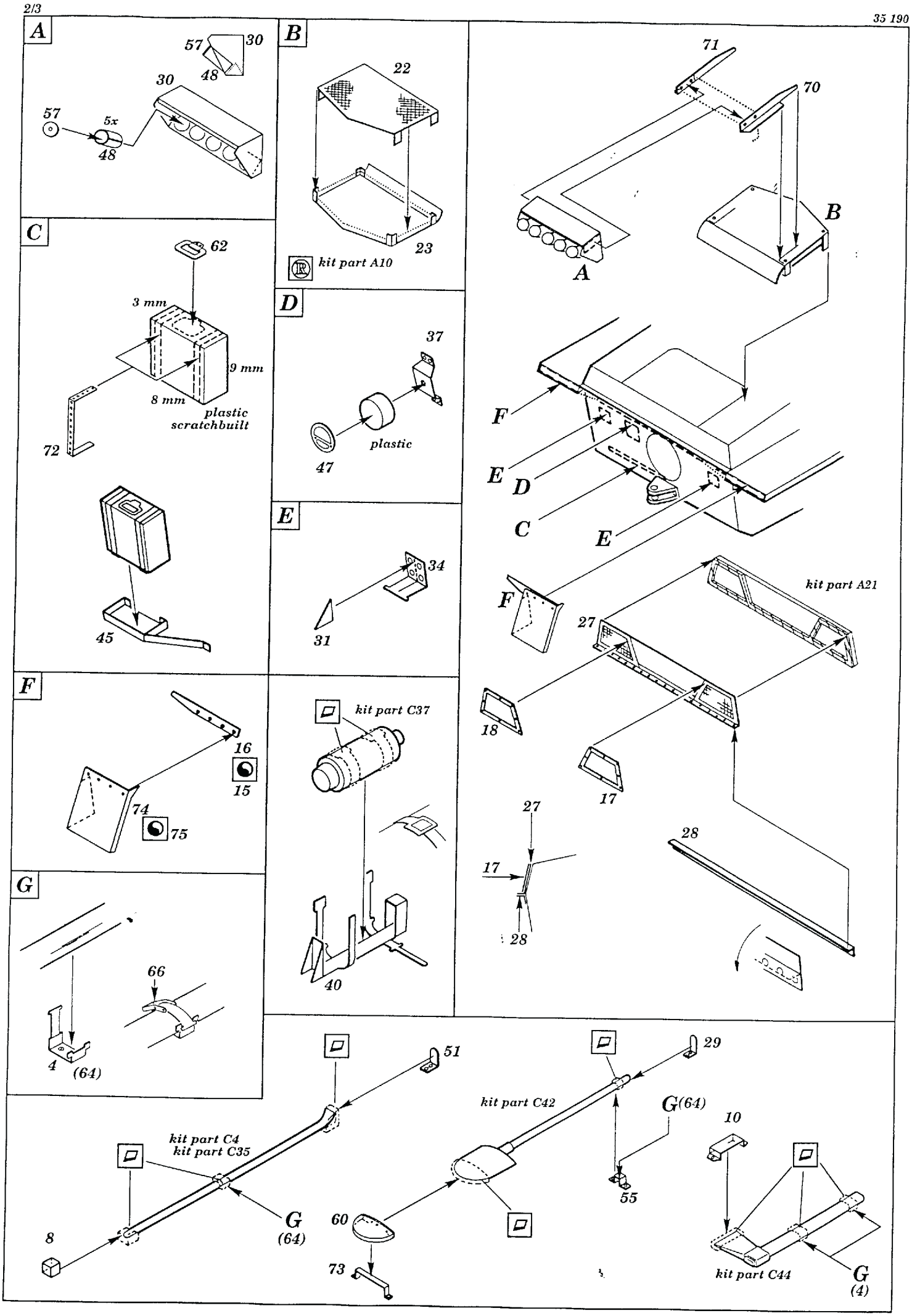
A
57
30
48
30
57
5x
48
B
22
23
kit part A10
C
62
3 mm
9 mm
8 mm
plastic
scratchbuilt
72
45
D
37
plastic
47
E
34
31
F
16
15
74
75
G
66
4
(64)
kit part C37
40
71
70
B
A
F
E
D
C
E
F
kit part A21
27
18
17
27
17
28
28
51
kit part C4
kit part C35
G
(64)
8
29
kit part C42
G(64)
55
60
73
10
kit part C44
G
(4)

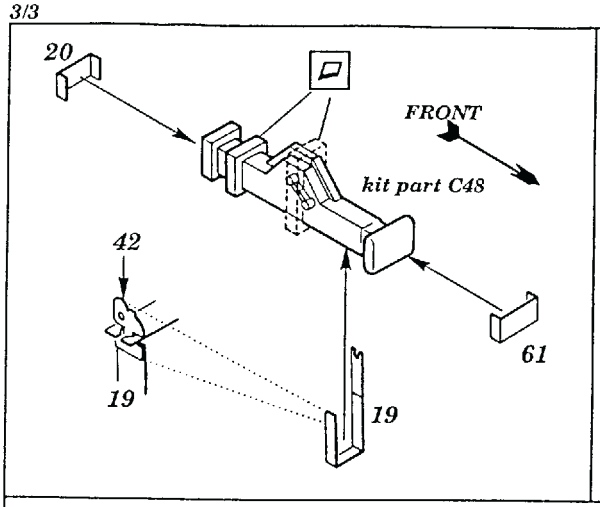
20
FRONT
kit part C48
42
19
19
61

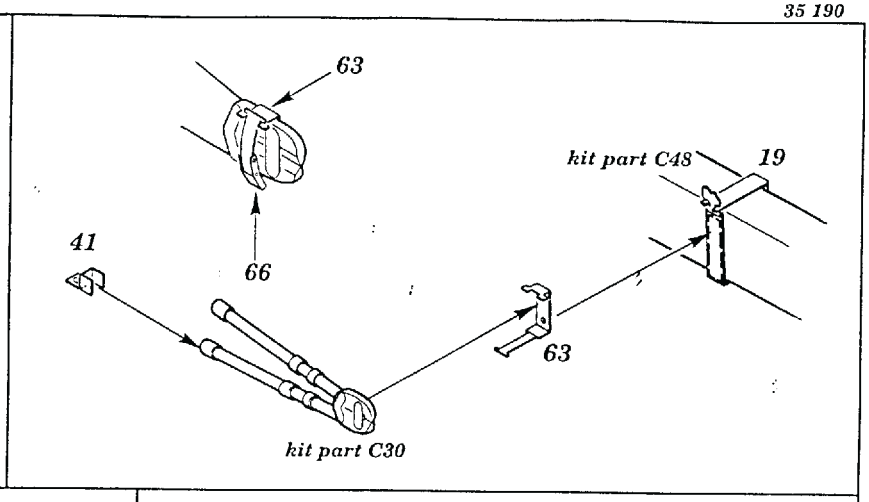
63
kit part C48
19
41
66
63
kit part C30

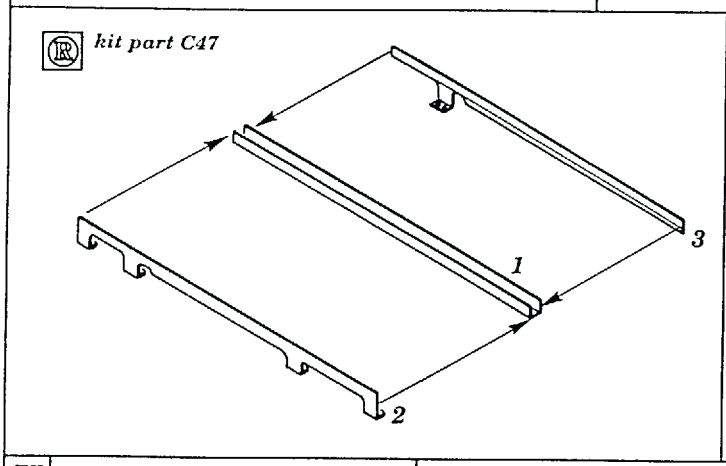
kit part C47
3
1
2

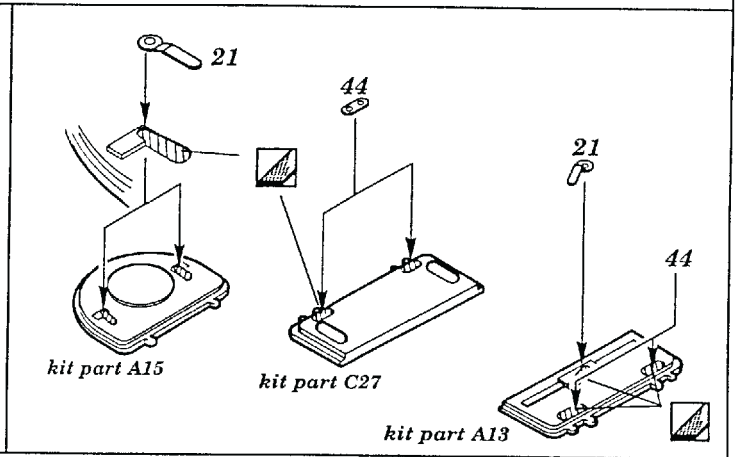
21
44
21
44
kit part A15
kit part C27
kit part A13

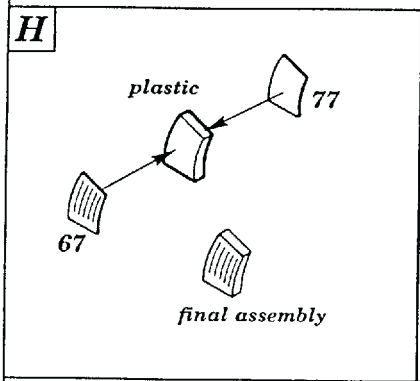
H
plastic
77
67
final assembly

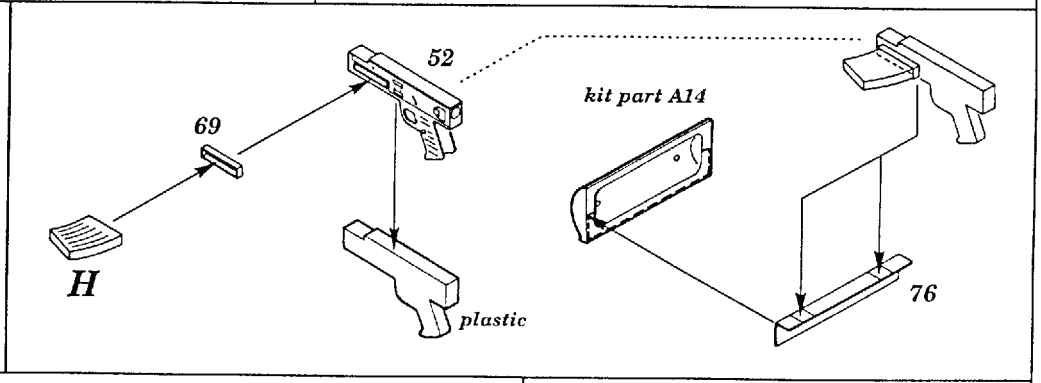
52
kit part A14
69
H
plastic
76

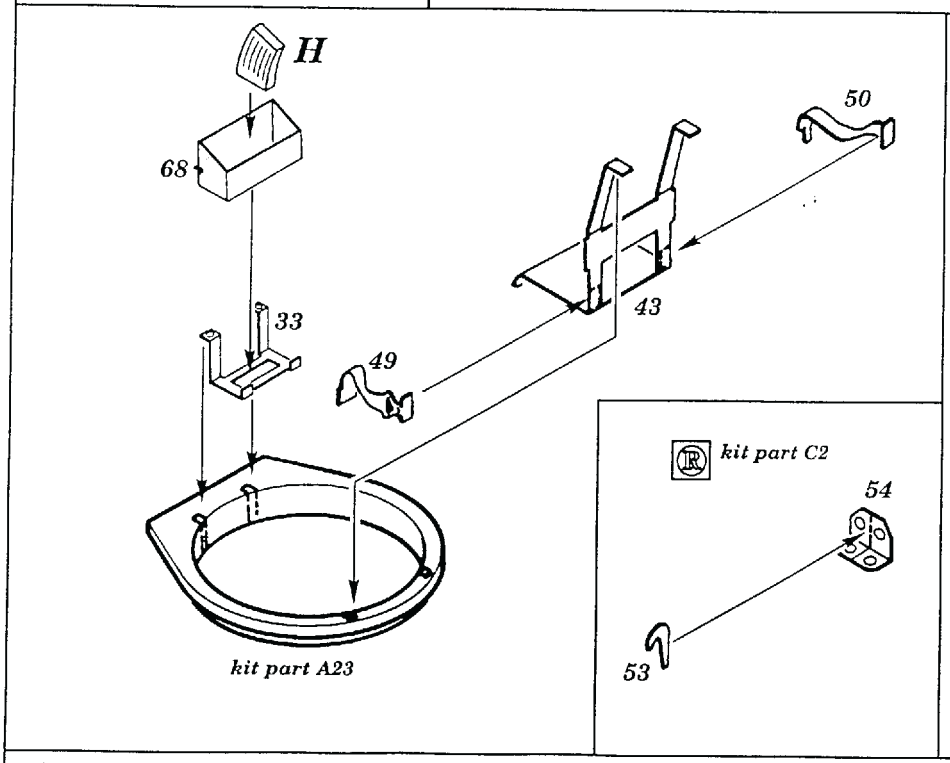
H
68
50
43
33
49
kit part A23

kit part C2
54
53

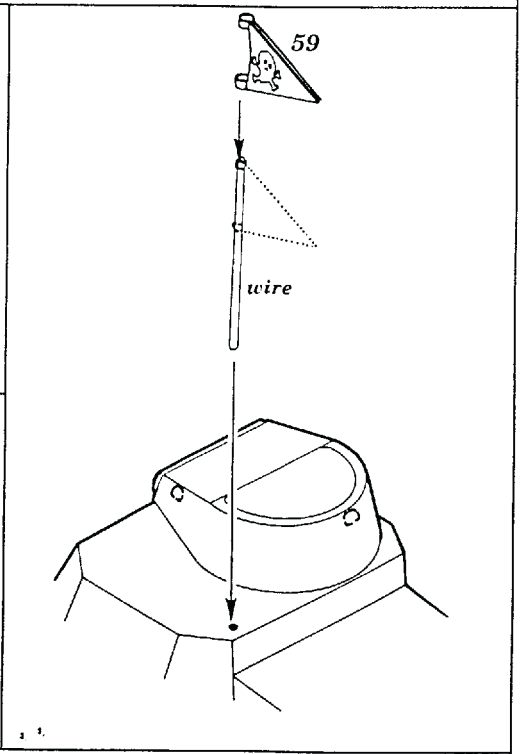
59
wire