eduard
Express Mask

XS 115

Su-27 Flanker

The die-cut mask for accurate canopy frame painting of the

Hasegawa 1/72 KIT

REFERENCES: Verlinden Lock on # 17
Concord # 1014: Soviet aircraft

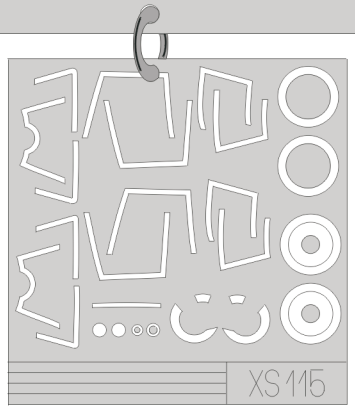

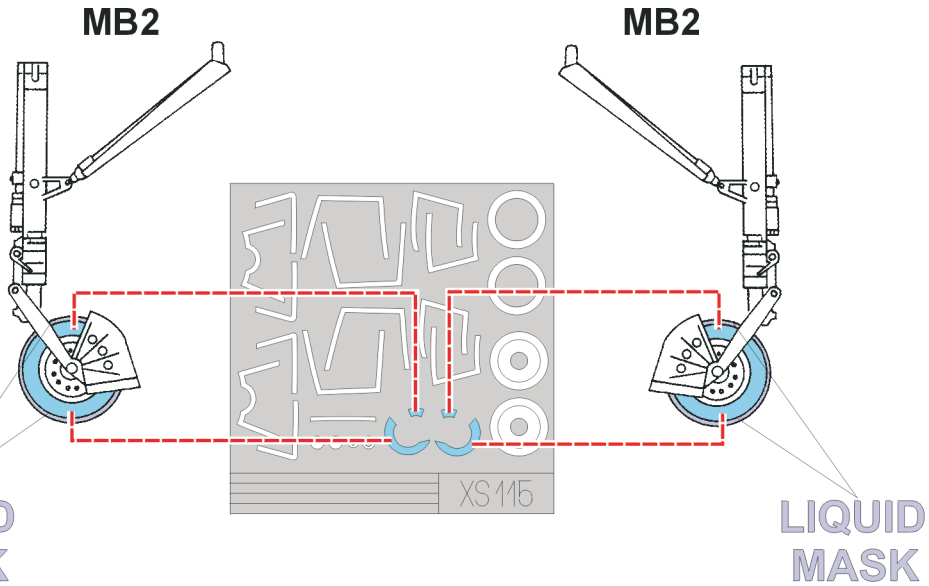

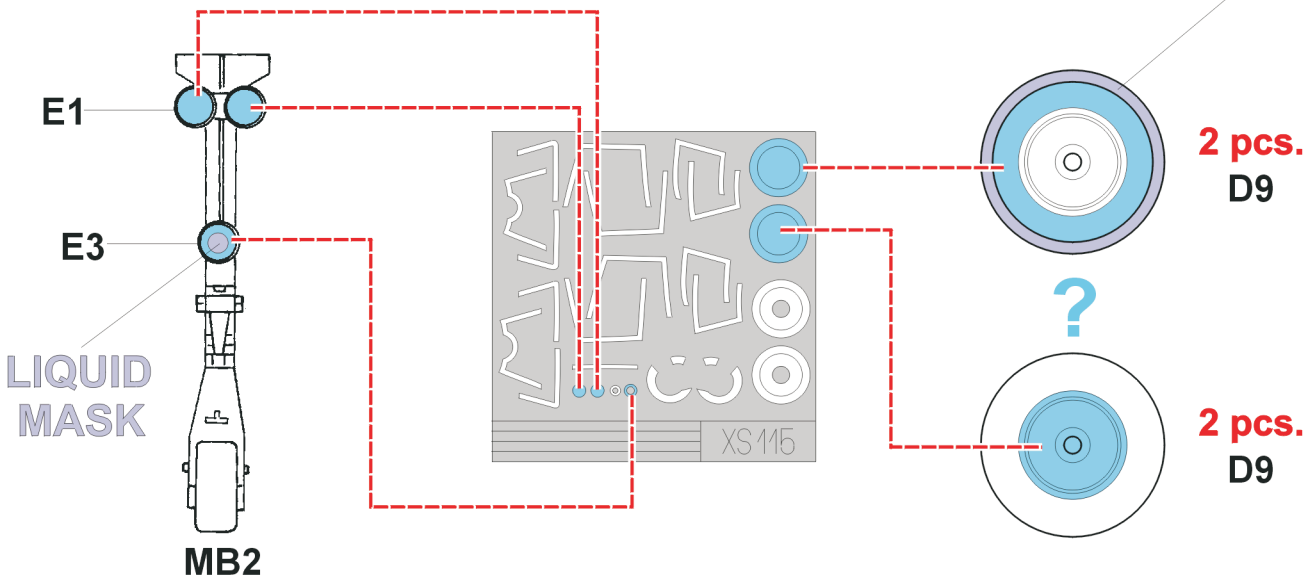

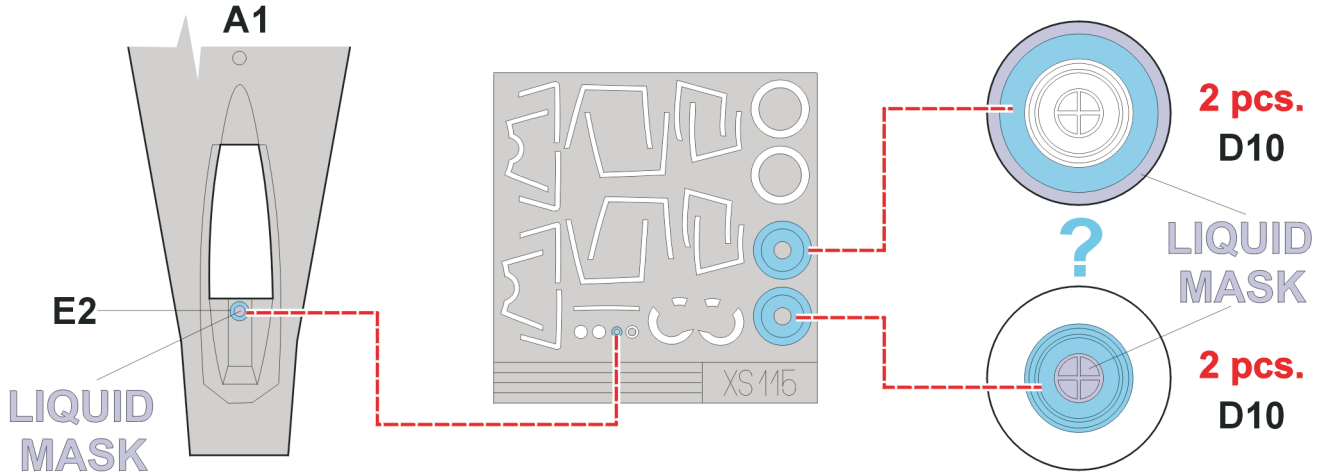

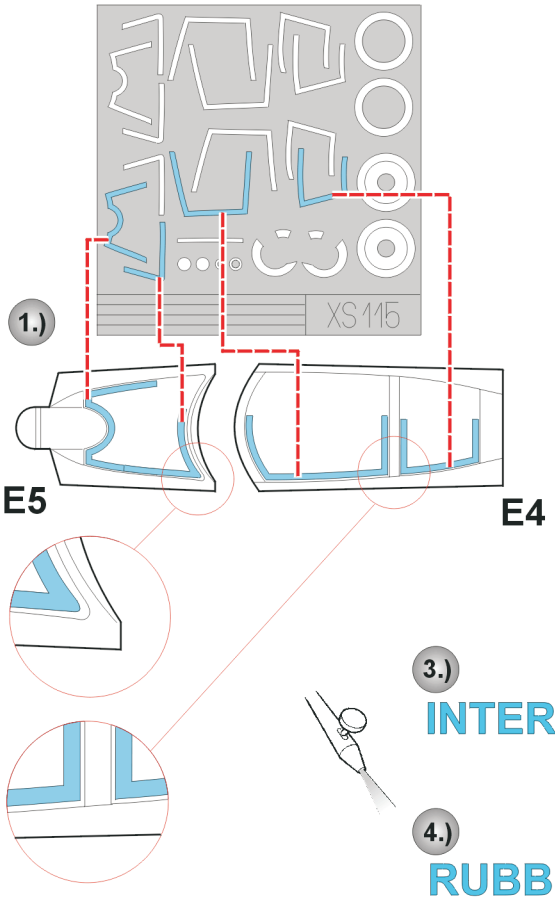

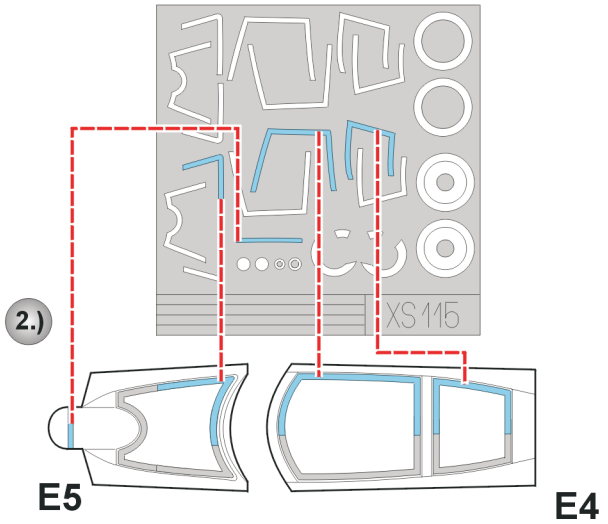

LIQUID MASK

3.)
INTERIOR COLOR

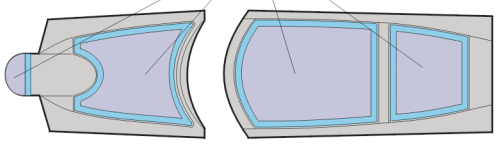

4.)
RUBBER COLOR

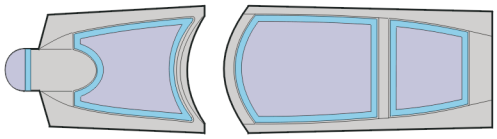

5.)
REMOVE MASK

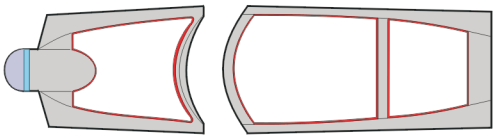

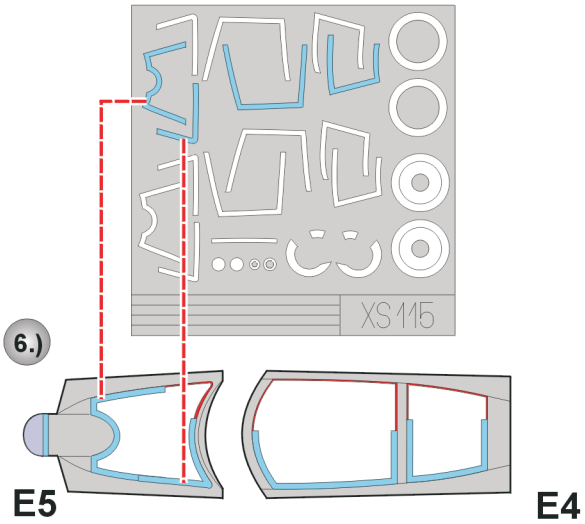

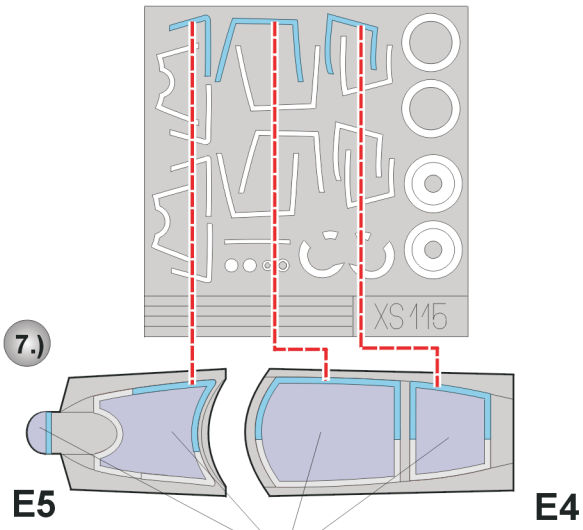

LIQUID MASK

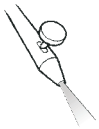

8.)
CAMOUFLAGE COLOR

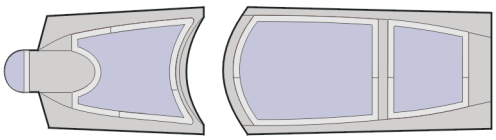

9.)
REMOVE MASK