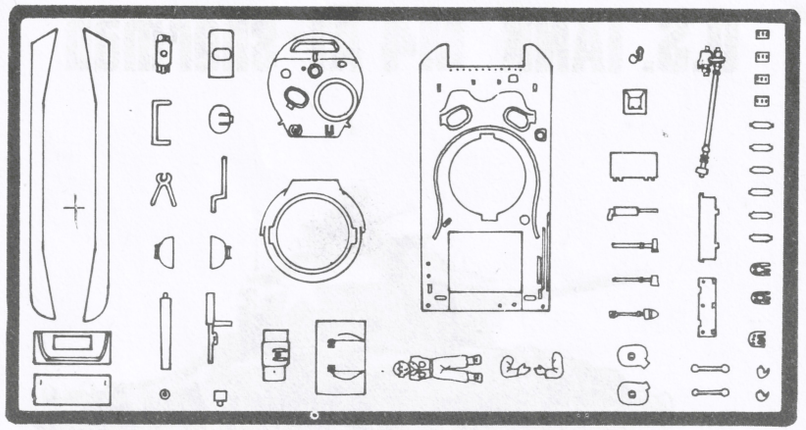

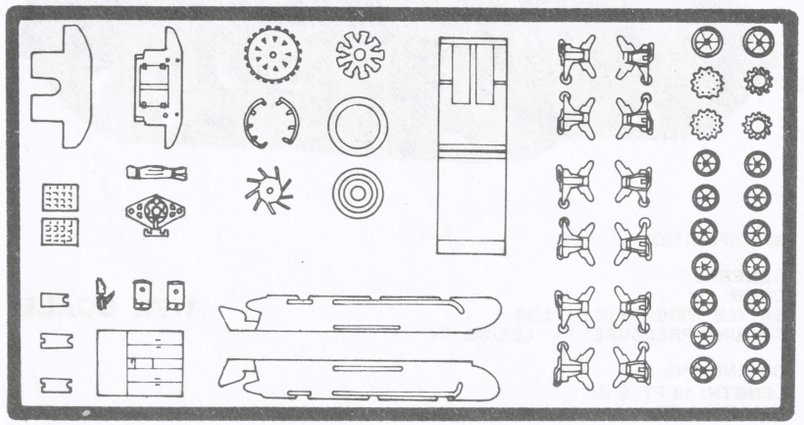

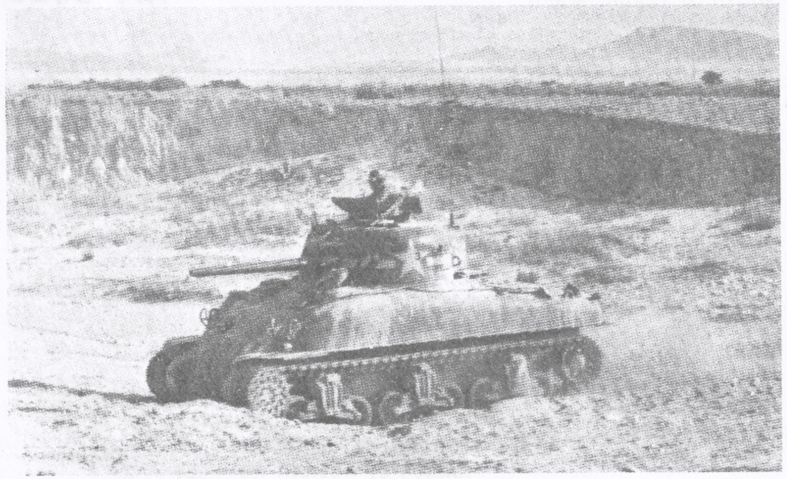

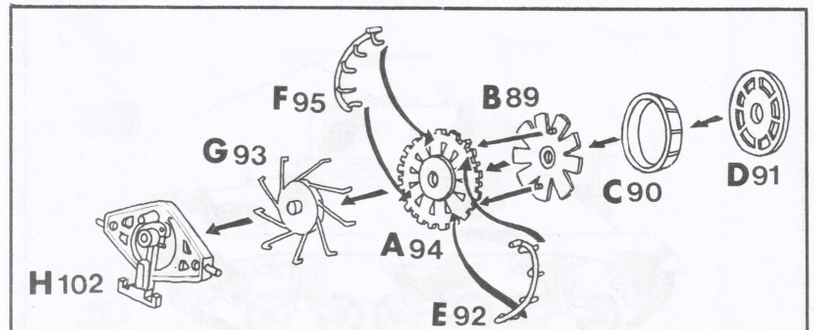
F95
B89
G93
C90
D91
A94
H102
E92

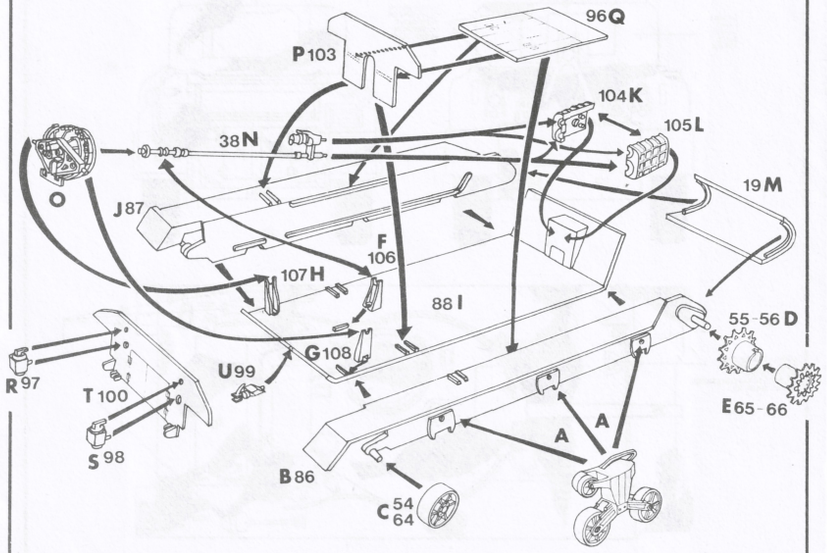
96Q
P103
104K
105L
38N
19M
O
J87
F
106
107H
88I
55-56D
R97
T100
U99
G108
E65-66
S98
A
A
B86
C 54 64

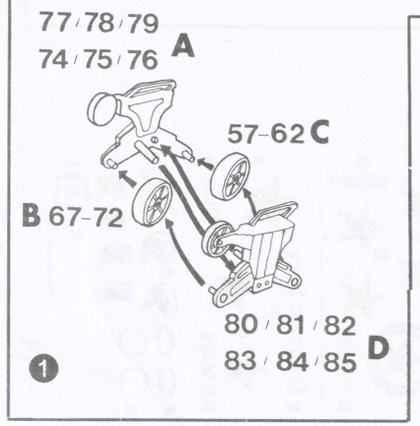
77/78/79
74/75/76 A
57-62C
B 67-72
80/81/82
83/84/85 D
1

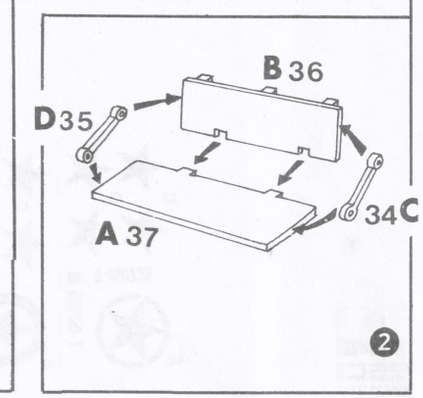
B 36
D35
A 37
34C
2

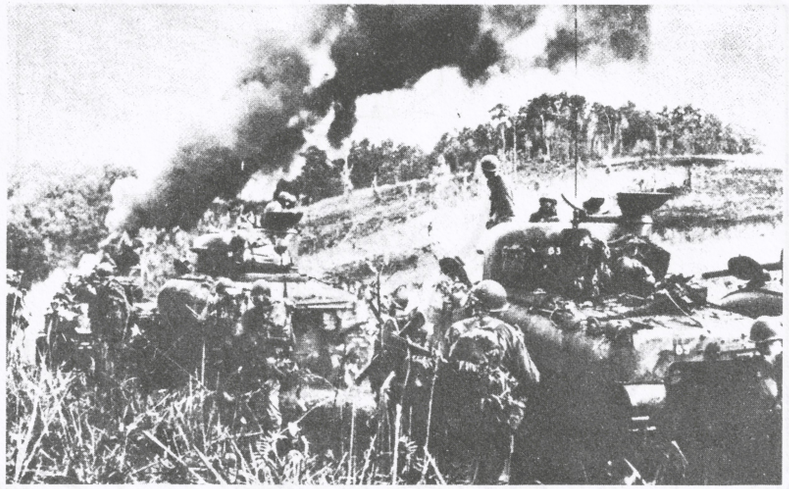

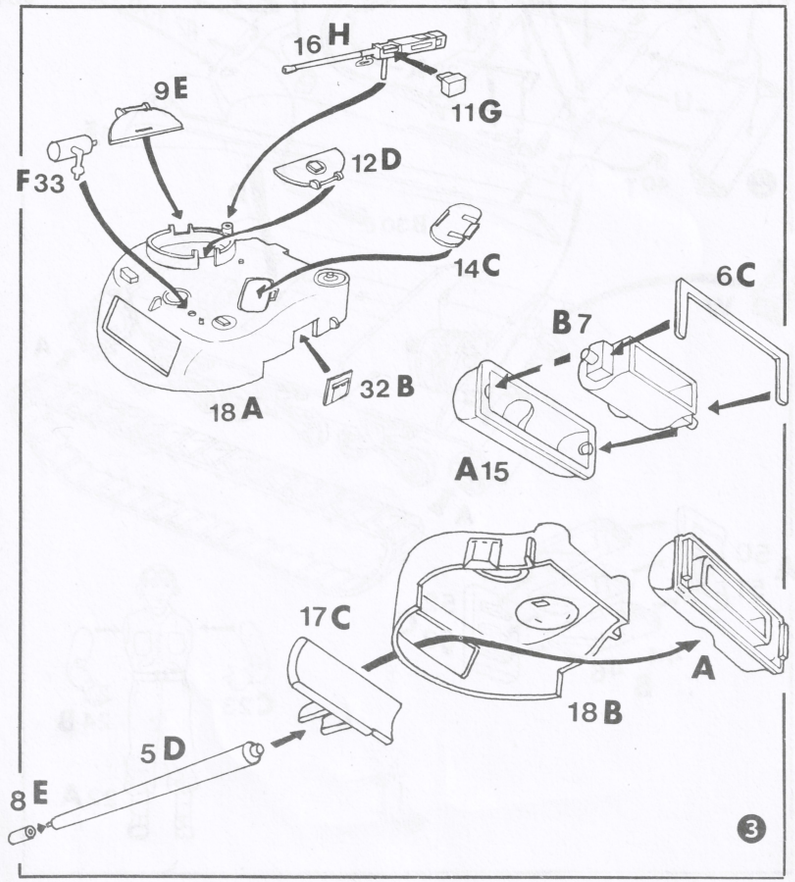
16H
9E
11G
F33
12D
14C
6C
B7
18A
32B
A15
17C
A
18B
5D
8E
3

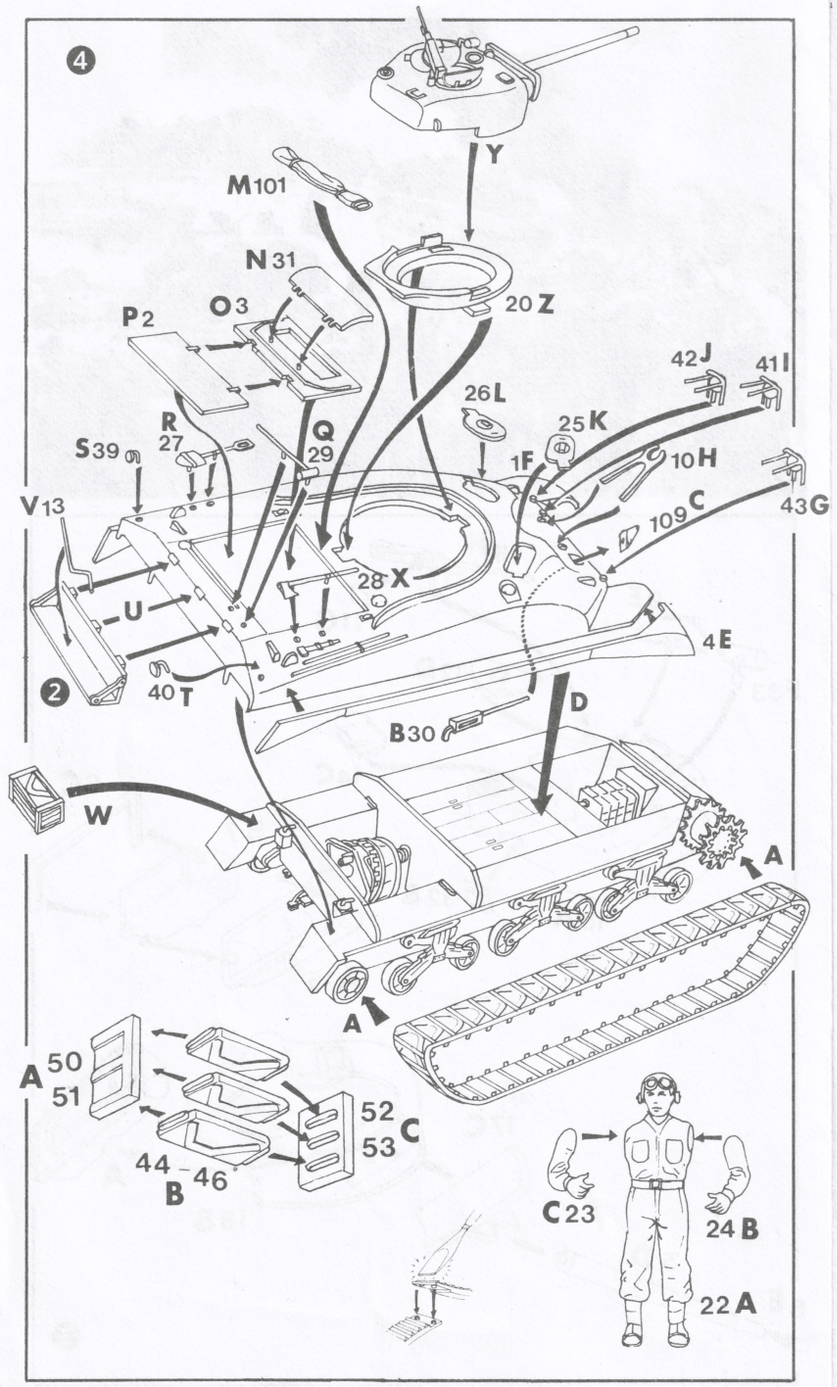

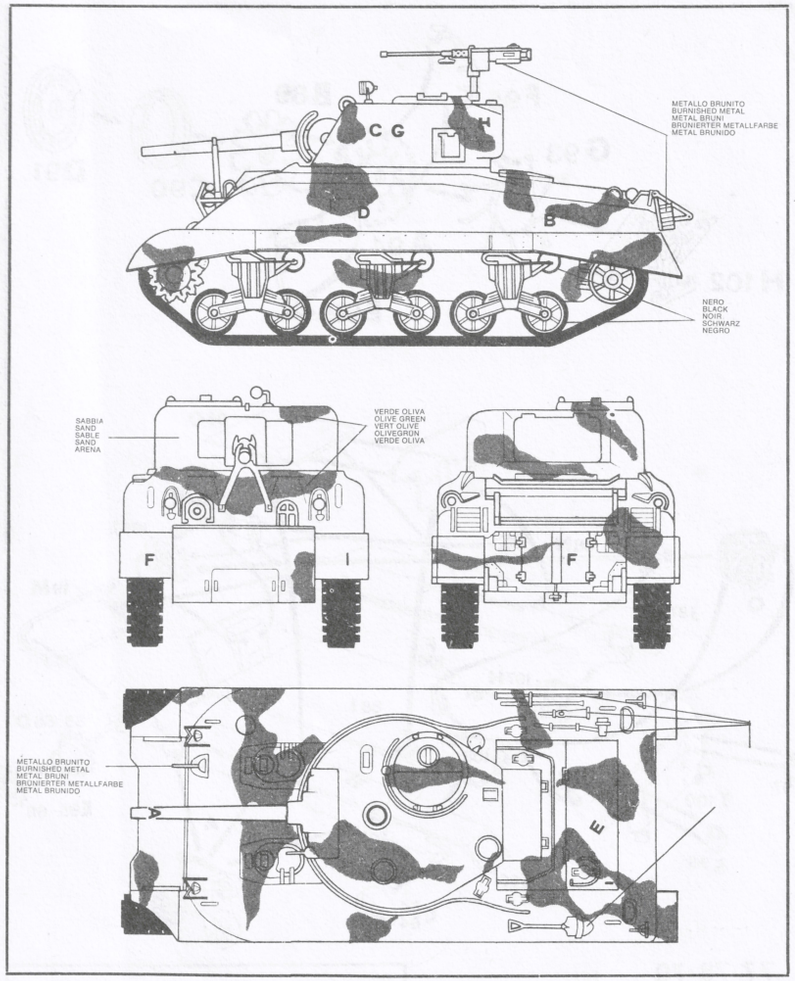

ESCI
MADE IN ITALY

U.S. TANK M4 A1 sherman

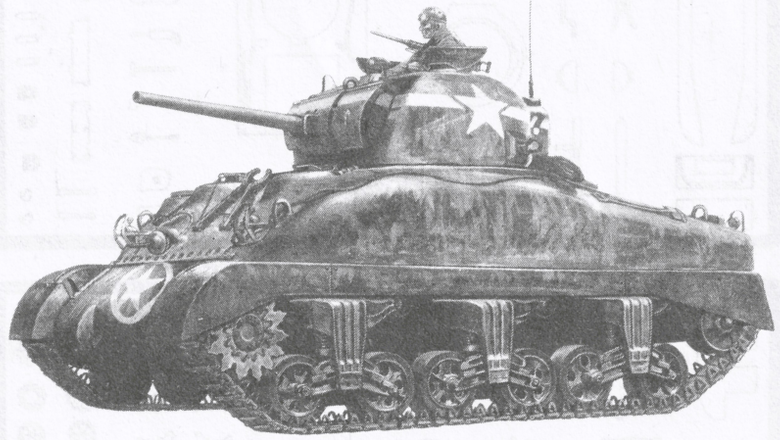

1/72 SCALE

KIT 8028

SPECIFICATION

GENERAL
CREW: 5.
BATTLE WEIGHT: 66,500 LBS.
GROUND PRESSURE: 13,7 LBS/SQ. IN.

DIMENSIONS
LENGTH: 19 FT. 2 IN.
HEIGHT: 9 FT.

WIDTH OF TRACK: 16.5 IN.
GROUND CLEARANCE: 17 1/8 IN.

ARMAMENT
ONE 75 MM. GUN M3, CALIBER LENGTH 40.
TWO CAL. 30 BROWNING MACHINE GUN, MI 91 9A4 (BOW AND COAXIAL).
(ONE CAL. 50 MACHINE GUN M2, H.B. - ANTI-AIRCRAFT).
ONE MORTAR, 2 IN., M3.
ONE TRIPOD MOUNT, M2, CAL. 30.
PROVISION FOR: ONE CAL. 45 SUBMACHINE GUN (EQUIPMENT OF CREW).

ENGINE
CONTINENTAL R975-C1, 353 HP AT 2,400 RPM, RADIAL 9 CYLINDERS, GASOLINE, AIR-COOLED, COMPRESSION RATIO 5.7 : 1.
Ek:nin ROETAOIN

ESCI
MADE IN ITALY

PERFORMANCE

SPEED: 24 MPH. ON ROADS.
CLIMBING ABILITY: 31° (60% SLOPE).
TRENCH CROSSING ABILITY: 7.5 FT.
FORDING DEPTH: 40 IN.
RADIUS OF ACTION: 100 MILES MAX.