1:72 SCALE

Bf109G-6[early]

EASY ASSEMBLY AUTHENTIC KIT

cyanoacrylate glue
强力胶

weight
配重

make hole
钻孔

cut / remove
切除

option
选择

no cement
不涂胶水

decal
贴纸

bend
弯曲

The way to apply the decals

1.Cut off the decal from the decal paper and put it into the warm water 40? for 10 seconds.
2.Take the decal from the water and put it on a piece of clean cloth.
3.Remove the decal slowly from the paper to the targeted location by a wet finger.
4.Use a piece of dry and soft cloth to press it gently on the decal until it getting dry and no bubble existing.

水贴纸的使用方法:

一.把相关的印花从水贴纸上剪下，放入40℃左右的温水中浸10秒。
二.然后将印花放在干净的布上。
三.拿上印花纸板，手指蘸水将印花移到适当的位置。
四.用软干布轻压印花直至水干，气泡消失。

80225

VII./JG3,1944,Germany.

JG50,Germany.

涂装同标贴指示
Painting & Marking guide

H X GUNZE SANGYO AQVEOUS HOBBY COLOUR X GUNZE SANGYO MR.COLOUR

※Some paints may not be available in your country. Please check your local hobby shop for substitute

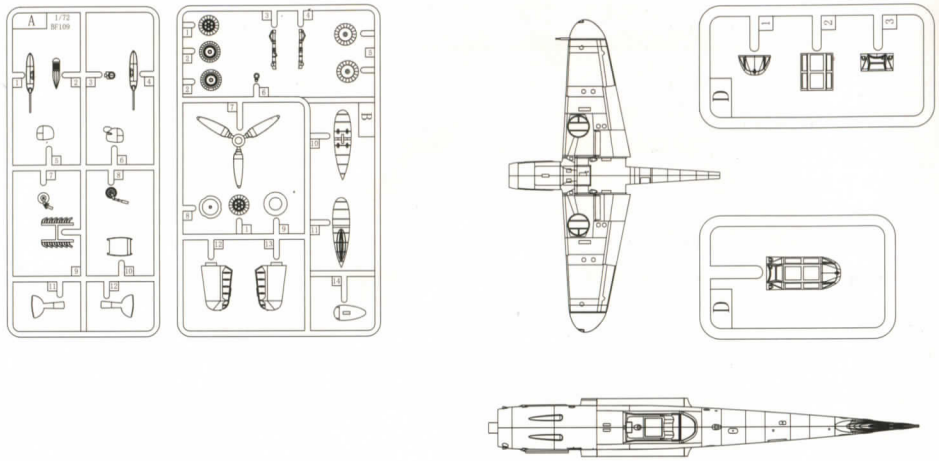

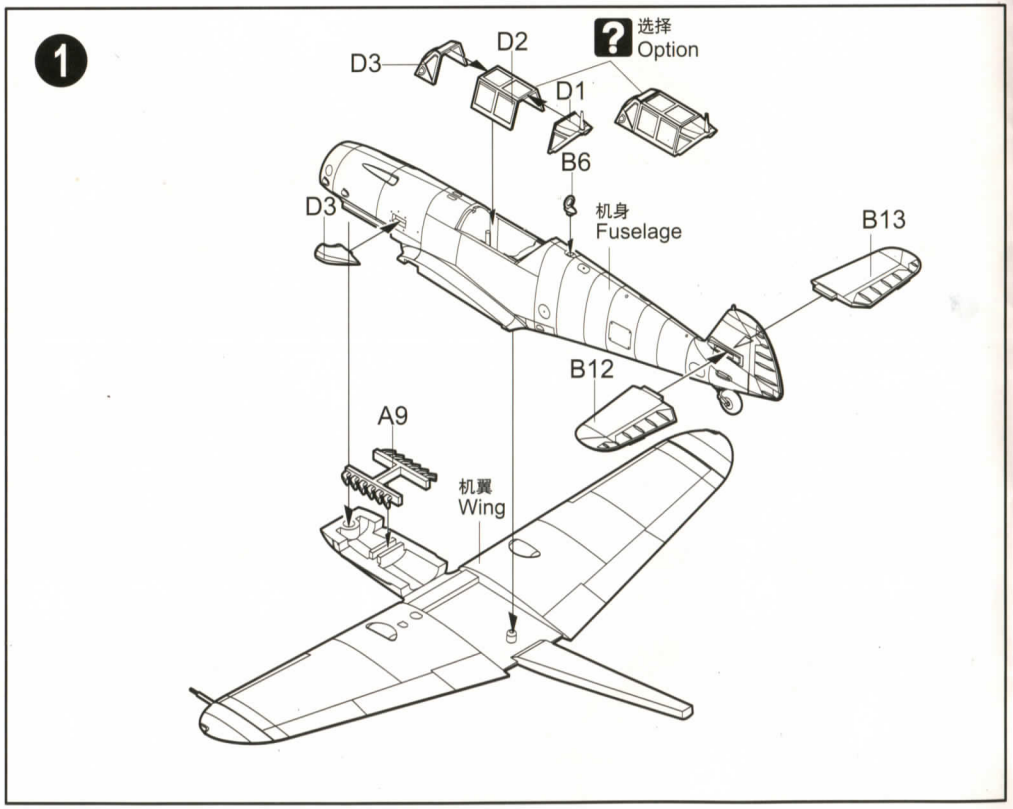
1
D3
D2
选择
Option
D1
B6
D3
机身
Fuselage
B13
B12
A9
机翼
Wing

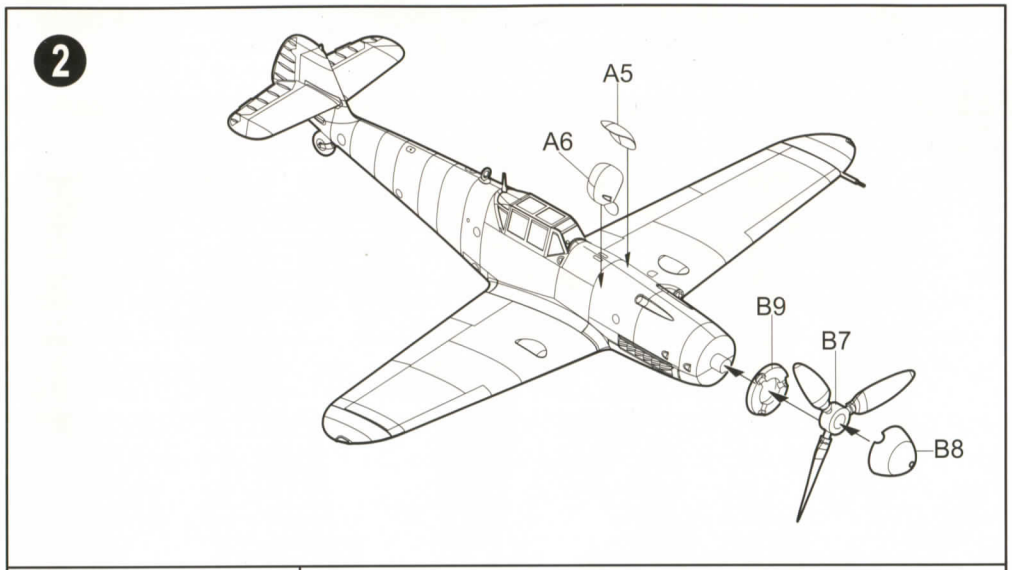
2
A5
A6
B9
B7
B8

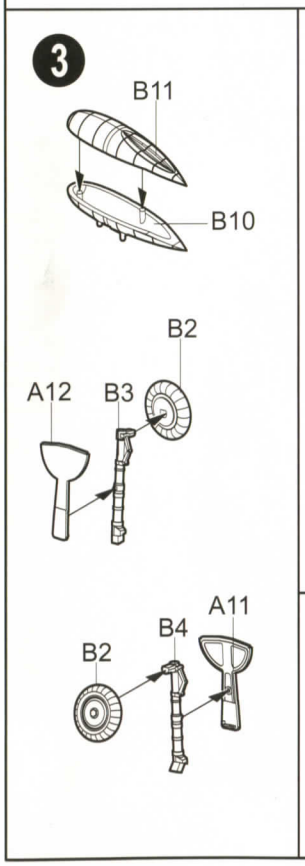
3
B11
B10
B2
A12
B3
A11
B4
B2

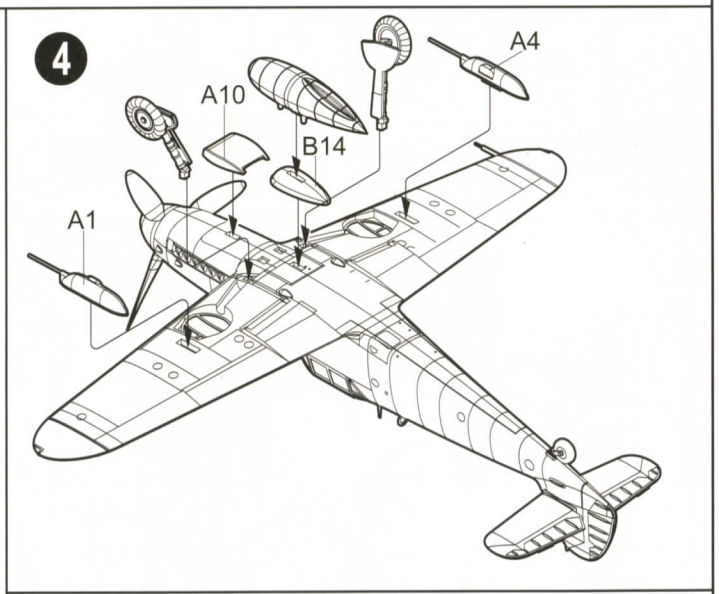
4
A4
A10
B14
A1

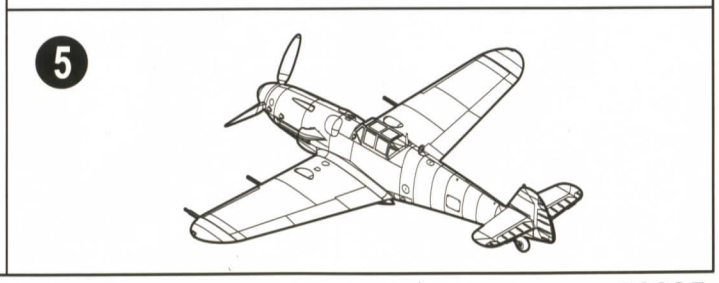
5

80225