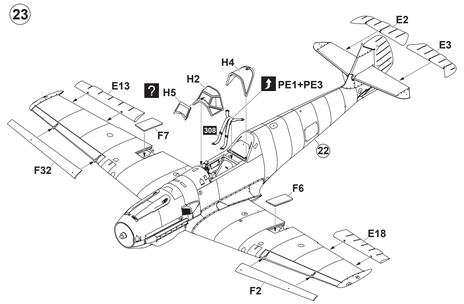

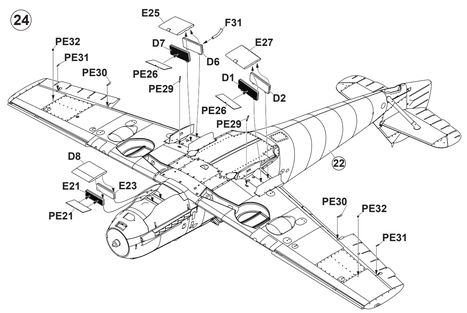

NOTE: FOR PARTS PE26, H5, PLEASE CHECK YOUR REFERENCES.

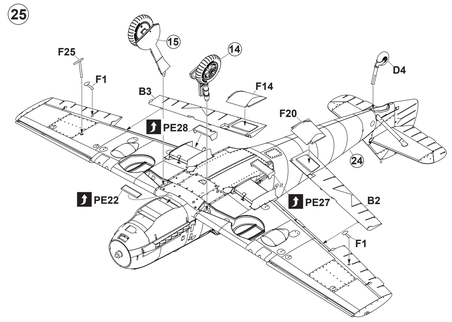

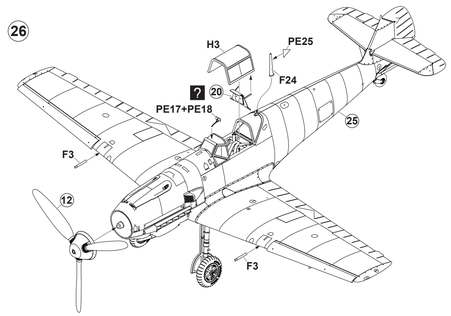

NOTE: FOR PARTS PE25, PE17+PE18, 20, PLEASE CHECK YOUR REFERENCES.

Stencils Scheme

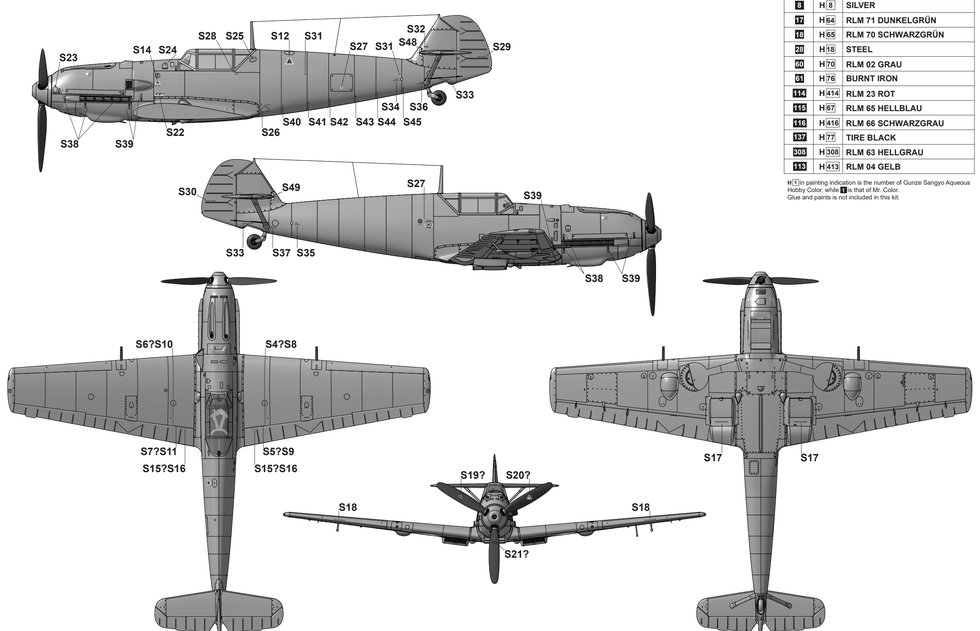

NOTE: FOR PROPELLER MARKING, PLEASE CHECK YOUR REFERENCES.

1	H 1	RLM 21 WEIß
2	H 2	RLM 22 SCHWARZ
8	H 8	SILVER
17	H 64	RLM 71 DUNKELGRÜN
18	H 65	RLM 70 SCHWARZGRÜN
20	H 15	STEEL
50	H 79	RLM 02 GRAU
51	H 76	BURNT IRON
114	H 414	RLM 23 ROT
115	H 67	RLM 65 HELLBLAU
116	H 416	RLM 66 SCHWARZGRAU
137	H 77	TIRE BLACK
308	H 308	RLM 63 HELLGRAU
113	H 413	RLM 04 GELB

H 1 in painting indication is the number of Gunze Sangyo Aqueous Hobby Color, while 1 is that of Mr. Color.
Glue and paints is not included in this kit.

Item No. D5-08 scale 1/48

wingsy kits

German WWII Fighter MESSERSCHMITT Bf 109 E-3 «Emil»

The Messerschmitt Bf 109 E «Emil» was a further development of the very successful fighter line developed by Bayerische Flugzeugwerke under the leadership of Wilhelm Messerschmitt and Robert Lusser, which went into production at the end of 1938. To improve on the performance afforded by the 441~515 kW (600~700 PS) Jumo 210, the larger, longer Daimler-Benz DB 601A engine was used, yielding an extra 223 kW (300 PS) at the cost of an additional 181 kg (400 lb). A much bigger cooling area was needed to disperse the extra heat generated by the DB 601, and this led to the first major redesign of the basic airframe. Enlarging the existing nose-mounted radiator sufficiently to cool the engine would have created extra weight and drag, negating some of the performance gains afforded by the increased power, so it was decided to move the main radiators to the undersurfaces of the wings immediately outboard of the junction of the wing root and wing panel, just forward of the trailing edges' inner ends, leaving the oil cooler under the nose in a small, streamlined duct. The new radiator position also had the effect of counterbalancing the extra weight and length of the DB 601, which drove a heavier three-bladed Vereinigte Deutsche Metallwerke (VDM)-made propeller. Because the radiators were mounted near the trailing edge of the wing, coinciding with the increased speed of the airflow accelerating around the wing camber, cooling was more effective than that of the Jumo engined 109s, albeit at the cost of extra ducting and piping, which was vulnerable to damage. To test the new 1,100 PS (1,085 hp, 809 kW) DB 601A engine, two more prototypes (V14 and V15) were built, each differing in their armament. While the V14 was armed with two 7.92 mm MG 17s above the engine and one 20 mm MG FF in each wing, the V15 was just fitted with the two MG 17s mounted above the engine. After test fights, the V14 was considered more promising and a pre-production batch of 10 E-0 was ordered. Batches of both E-1 and E-3 variants were shipped to Spain for evaluation, and first saw combat during the final phases of the Spanish Civil War. The E-3 production version kept two 7.92 mm MG 17s above the engine and two 20 mm MG FF in the wings. A total of 1868 E-3 were built.

Specifications Bf 109 E-1 - Crew: 1; Lenght: 28'10½" (8.8m); Wingspan: 32'5½" (9.9m); Weight: 4189-5875 lbs (1190-2665 kg); Wing area: 174.05 sq. feet (16.7 sq. m); Max speed: 348 mph (560 km/h) at 14560 feet (4500 m); Climb rate: 3510 feet per min (17.83 m/s); Ceiling: 36500 feet (11125 m); Range: 410 miles (660 km); Engine: 1 x 809 kW (1085 hp) Daimler-Benz DB601A (12-cylinder, direct fuel injection, inverted V engine); Armament: 2 x 7.92 mm MG 17 machine guns and 2 x 20 mm MG FF canons.

⚠ CAUTION

- ★ *Read carefully and fully understand the instructions before commencing assembly.*
- ★ *Adult supervisor should also read instructions when assembled by children aged 14 or younger.*
- ★ *Tear up and throw away the plastic bags containing kit parts as children may suffocate by swallowing or wearing over head.*
- ★ *Cut the parts off properly and throw the waste parts into dustbox at once.*
- ★ *Do not play with the parts for any other purpose as some parts may be too sharp. More caution and care needed for families with infants.*
- ★ *Do not swallow any parts and cut-off chips. Keep away from reach of children.*
- ★ *Wrong or careless usage of nipper, cutter, file etc. may hurt the assembler.*
- ★ *Be cautions as follows when using adhesives and / or paints:*
  - *Do not use in closed room to avoid poisoning / toxic.*
  - *Do not use near fire to avoid flammability.*
  - *Do not put any adhesives and / or paints into mouth and eye. If mistakenly put into, wash out promtply with full water and cosult a medic.*
- ★ *Use toolings, adhesives, paints, batteries etc. properly after careful reading of instructions given in each handling manual.*

© 2021 Wingsy Kits. Printed in Ukraine

REMOVE | OPEN HOLE | BEND | DO NOT GLUE | OPTIONAL | APPLY DECAL | 2x QUANTITY OF OPERATIONS

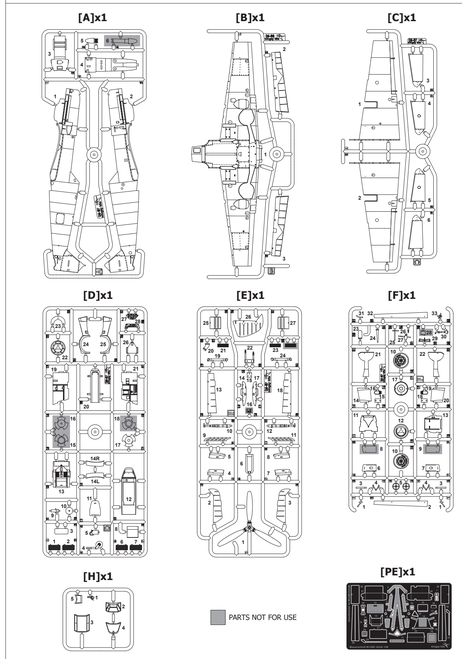

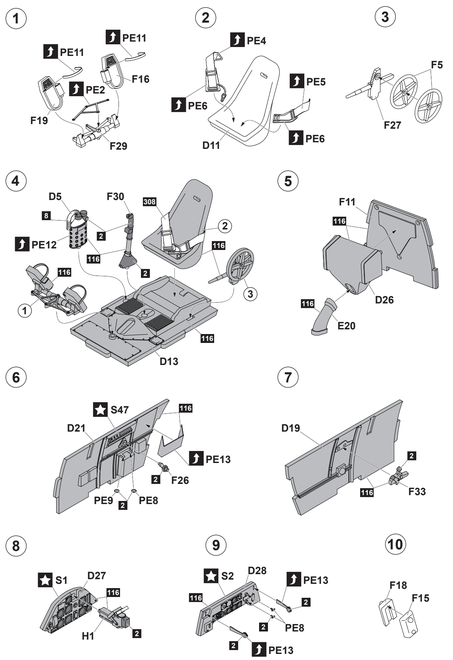

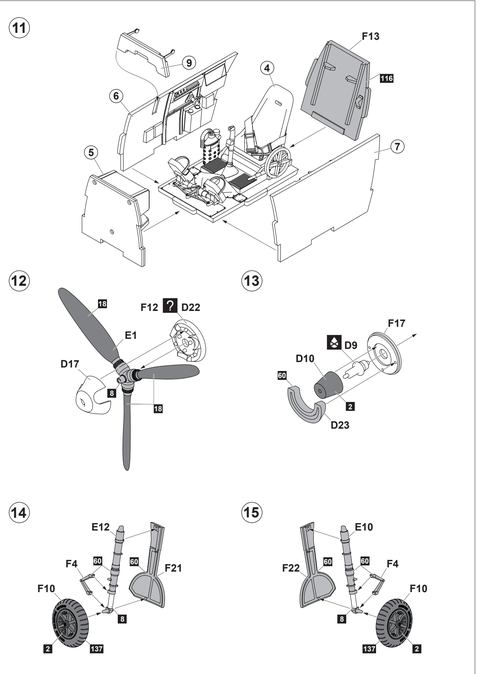

NOTE: FOR PROPELLER BASE (PARTS D22, F12), PLEASE CHECK YOUR REFERENCES.

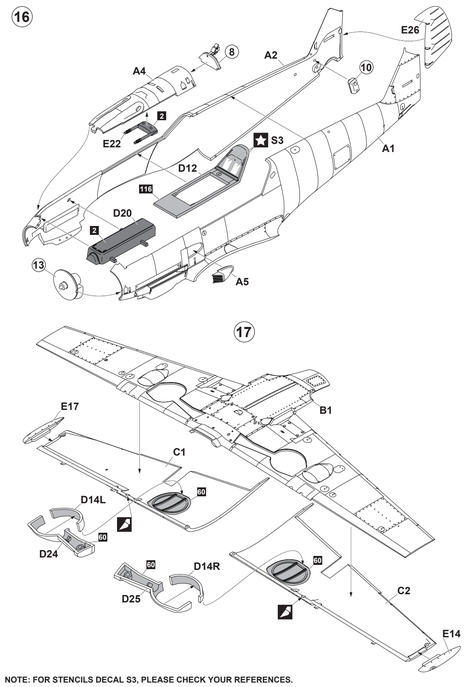

NOTE: FOR STENCILS DECAL S3, PLEASE CHECK YOUR REFERENCES.

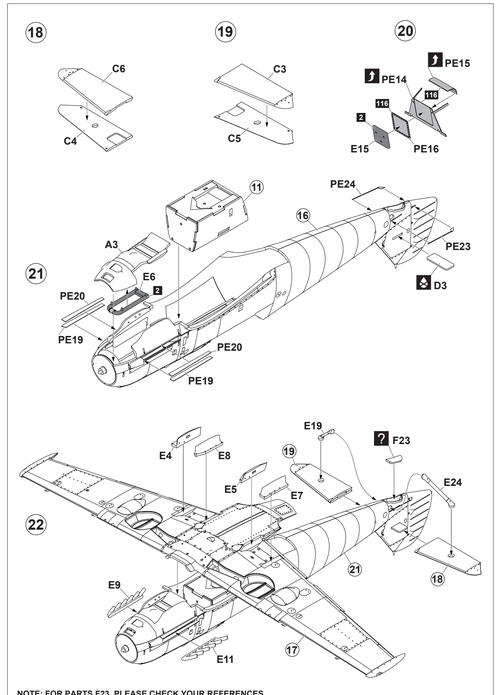

NOTE: FOR PARTS F23, PLEASE CHECK YOUR REFERENCES.