Set
AC72-60

AIRWAVES

F3H DEMON

This detail set is manufactured from photo etched brass sheet and is meant for use on the Emhar kit.
Use a sharp modelling knife to seperate components from frame, cutting as near to part as possible and on a hard firm surface. Tag scars can be cleaned by holding part in pliers and using a fine file. To fold part hold up to line of fold in pliers and fold in one go using a screwdriver blade for leverage. Before assembly and painting ensure that parts are fully defluxed by cleaning in washing up detergent and rinsing in clean water. Also prior to painting prime parts with self etching primer or matt enamel. For fixing use superglue or 5 minute epoxy using only the latter on clear parts. Position of parts in diagrams are for guidance only, for final positioning and colouring consult reference material.
Airwaves are designed and manufactured in the Midlands for E.D. Models, 64 Stratford Road, Shirley, Solihull, West Midlands B90 3LP, England. Telephone 021-744-7488.

1 HARNESS

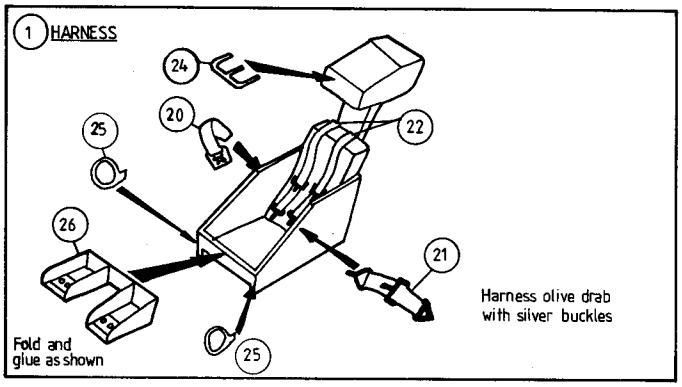

2 COCKPIT

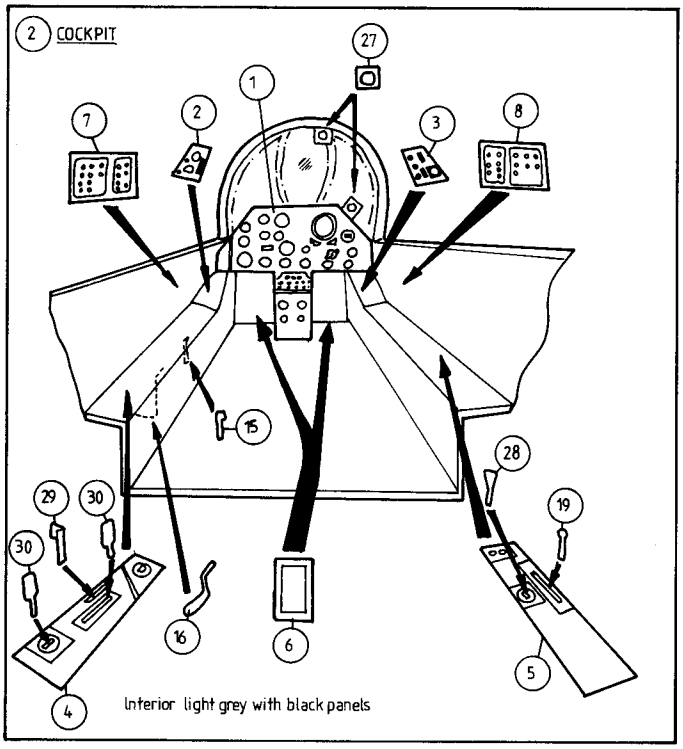

3 CANOPY

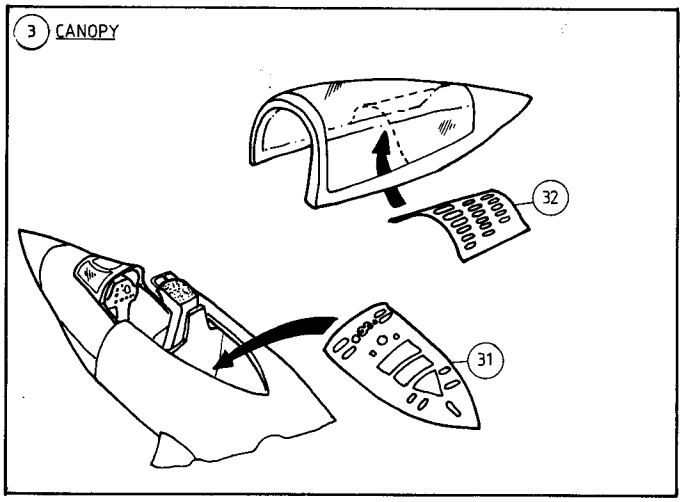

4 AIR BRAKES

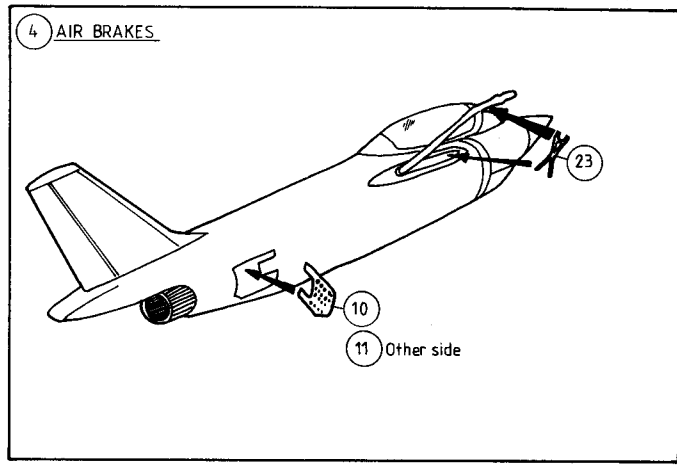

5 UNDERCARRIAGE

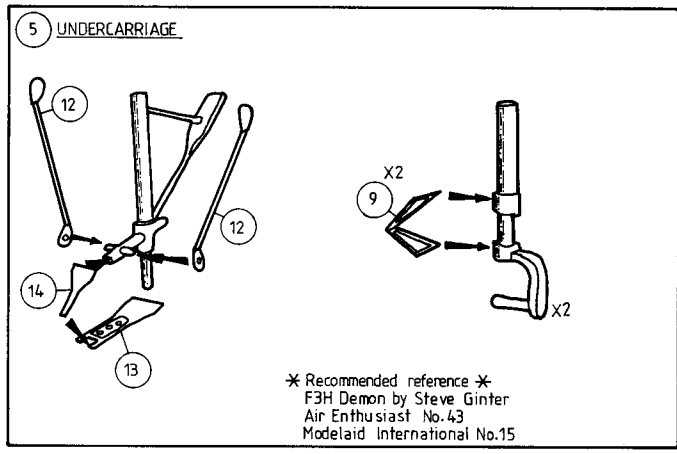

6 GUN PORT COVERS

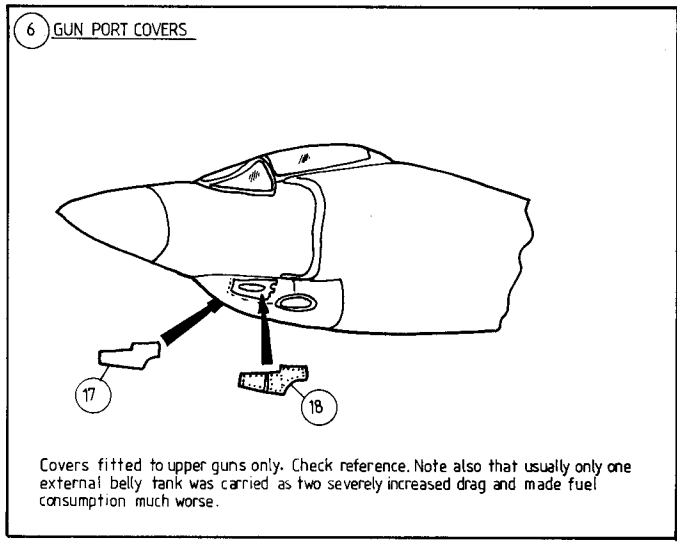
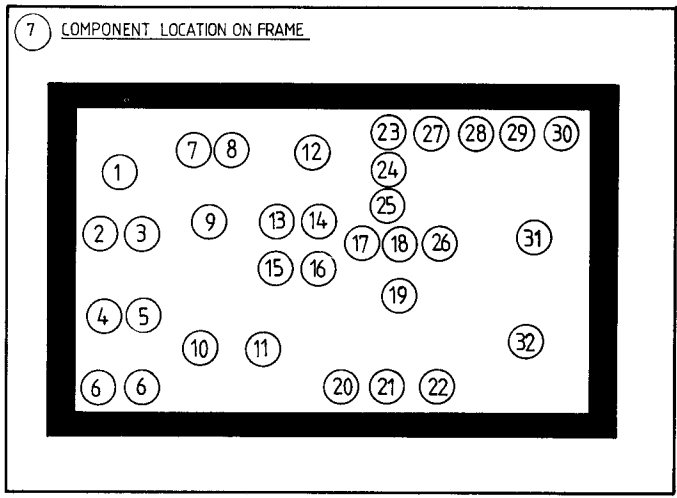
7 COMPONENT LOCATION ON FRAME